CITY OF WEST DES MOINES
CITY COUNCIL MEETING COMMUNICATION

Date: September 4, 2018

ITEM: Pinedale Park, 3375 Woodland Avenue – Approval of a site plan for park improvements – City of West Des Moines– SP-003987-2018

RESOLUTION: Approval of Site Plan

FINANCIAL IMPACT: Undetermined.

BACKGROUND: Kevin Conn with the Parks & Recreation Department, on behalf of City of West Des Moines is requesting approval of a site plan for playground, basketball court and shelter park improvements for Pinedale Park.

Plan and Zoning Commission Action:
Vote: 6-0 approval, with Commissioner Drake absent
Date: August 27, 2018
Motion: Adopt a resolution recommending the City Council approve the Site Plan Request

OUTSTANDING ISSUES: There are no outstanding issues. The applicant has stated that they are in agreement with all of staff's recommendations and conditions. The following items of interest are noted in the attached Plan and Zoning Commission report (see Exhibit I):

- Applicant's Request
- History
- City Council Subcommittee - *Development & Planning, August 6, 2018*
- Staff Review and Comment
  - *Minimum lot size*
- Comprehensive Plan Consistency
- Findings
- Staff Recommendation and Conditions of Approval
- Owner/Applicant

RECOMMENDATION: Based upon the preceding review and a finding of consistency with the goals and policies of the Comprehensive Plan, the Plan and Zoning Commission recommends the City Council approve a Site Plan to construct park improvements for Pinedale Park, subject to the applicant meeting all City Code requirements.

Lead Staff Member: J. Bradley Munford

Staff Reviews:

Department Director	
Appropriations/Finance	
Legal	JBW
Agenda Acceptance	

PUBLICATION(S) (if applicable)

Published In	not required
Date(s) Published	
Letter sent to surrounding property owners	

SUBCOMMITTEE REVIEW (if applicable)

Committee	Development & Planning		
Date Reviewed	8/6/2018		
Recommendation	Yes ☒	No ☐	Split ☐

ATTACHMENTS:

- Exhibit I - Plan and Zoning Commission Communication
  - Attachment A - Commission Resolution
    - Exhibit A - Conditions of Approval
  - Attachment B - Location Map
  - Attachment C - Site Plan
- Exhibit II - City Council Resolution
  - Exhibit A - Conditions of Approval

EXHIBIT I

CITY OF WEST DES MOINES
PLAN AND ZONING COMMISSION COMMUNICATION

Meeting Date: August 27, 2018

Item: Pinedale Park, 3375 Woodland Avenue – Approval of a site plan for park improvements – City of West Des Moines– SP-003987-2018

Requested Action: Recommend approval of a Site Plan

Case Advisor: J. Bradley Munford

Applicant's Request: Kevin Conn with the Parks & Recreation Department, on behalf of City of West Des Moines is requesting approval of a site plan for playground, basketball court and shelter park improvements for Pinedale Park.

History: The property is currently zoned Medium Density Residential (RM). The land was originally platted in 1970 as a portion of Lot 4 Woodland Park Plaza Plat 1. Pinedale Park was created in 1971 as a part of the parkland dedication requirement for the Woodland West Condominiums.

City Council Subcommittee: The proposed site plan was presented to the Development and Planning Subcommittee on August 6, 2018 as an informational item only. The Subcommittee was supportive of the development.

Staff Review and Comment: This request was distributed to other City departments and other agencies for their review and comment. There are no outstanding issues. Staff notes the following:

Minimum lot size: The Park is currently zone Medium Density Residential (RM). The minimum lot size for non-dwelling uses such as a park is 2 acres. Pinedale Park is approximately 1 acre. The park was created in 1971 as a part of the parkland dedication requirement for the Woodland West Condominiums. The zoning code at that time only required a 1 acre minimum lot size for non-dwelling uses. The change in the code for lot size that occurred after the park was developed, created a legal non-conforming lot of record. Because of the legal non-conforming status this site plan can move forward without the need a variance request or a rezoning.

Comprehensive Plan Consistency: The project has been reviewed for consistency with the Comprehensive Plan. Based upon that review, a finding has been made that the proposed project is consistent with the Comprehensive Plan in that the project is consistent with all of the goals and policies of the Comprehensive Plan and the land use map of the Comprehensive Plan.

Site Plan Findings: This proposed project was distributed to various city departments for review and comment. Based upon that review, the following findings have been made on the proposed project:

1. The proposed development and use is consistent with the West Des Moines Comprehensive Plan in that the project has been reviewed for consistency with the Comprehensive Plan. Based upon that review, a finding has been made that the proposed project is consistent with the Comprehensive Plan in that the project is consistent with all of the goals and policies of the Comprehensive Plan.

2. The proposed development and use does assure compatibility of property uses within the zone and general area in that this project was reviewed by various City Departments for compliance with the Zoning Ordinance.

3. All applicable standards and conditions have been imposed which protects the public health, safety and welfare in that this project was reviewed by various City Departments and public agencies for compliance with the various state and local regulations. Based upon that review a finding is made that the project has been adequately conditioned to protect the health, welfare and safety of the community.

4. There is adequate on-site and off-site public infrastructure to support the proposed development in that this project was reviewed by various public agencies and City Departments and public utilities to ensure that either the

petitioner will construct or the project has been conditioned to construct adequate public infrastructure to serve the development.

5. The proposed development and use has met the requirements contained in the City Code in that this project was reviewed by various City Departments and the project has complied with or has been conditioned to comply with all City Code requirements.

6. The proposed development and use is in keeping with the scale and nature of the surrounding neighborhood in that the proposed project is consistent with the zoning designation and Comprehensive Plan which designates this site as suitable for development such as that proposed by this project.

Staff Recommendations and Conditions of Approval: Based upon the preceding review and a finding of consistency with the Comprehensive Plan, staff recommends that the Plan and Zoning Commission adopt a resolution approving the site plan to allow park improvements for Pinedale Park subject to the applicant meeting all City Code requirements.

Property Owner/Applicant:

City of West Des Moines
4200 Mills Civic Parkway
West Des Moines, IA 50265
Kevin Conn
Kevin.conn@wdm.iowa.gov

Attachments:

Attachment A	-	Plan and Zoning Commission Resolution
Exhibit A	-	Conditions of Approval
Attachment B	-	Location Map
Attachment C	-	Site Plan

ATTACHMENT A

RESOLUTION NO. PZC-18-056

A RESOLUTION OF THE PLAN AND ZONING COMMISSION OF THE CITY OF WEST DES MOINES, RECOMMENDING TO THE CITY COUNCIL THAT IT APPROVE A SITE PLAN (SP-003987-2018) TO CONSTRUCT IMPROVEMENTS FOR A CITY PARK

WHEREAS, pursuant to the provisions of Title 9, Chapter 1 et seq, of the West Des Moines Municipal Code, the applicant, The City of West Des Moines, has requested approval for a Site Plan (SP-003987-2018) for park improvements on a 1 acre site located at the 3375 Woodland Avenue;

WHEREAS, studies and investigations were made, and staff reports and recommendations were submitted which is made a part of this record and herein incorporated by reference;

WHEREAS, on August 27, 2018, this Commission held a duly-noticed public meeting to consider the application for a Site Plan;

NOW, THEREFORE, THE PLAN AND ZONING COMMISSION OF THE CITY OF WEST DES MOINES DOES RESOLVE AS FOLLOWS:

SECTION 1. The findings, for approval, in the staff report dated August 27, 2018 or as amended orally at the Plan and Zoning Commission hearing of August 27, 2018, are adopted.

SECTION 2. The Pinedale Park Site Plan (SP-003987-2018) to construct park improvements, is recommended to the City Council for approval, subject to compliance with all the conditions in the staff report including conditions added at the meeting, and attached hereto as Exhibit "A." Violation of any such conditions shall be grounds for revocation of the permit, as well as any other remedy which is available to the City.

PASSED AND ADOPTED on August 27, 2018.

Craig Erickson
Plan and Zoning Commission

ATTEST:

Recording Secretary

I HEREBY CERTIFY that the foregoing resolution was duly adopted by the Plan and Zoning Commission of the City of West Des Moines, Iowa, at a regular meeting held on August 27, 2018, by the following vote:

AYES: Andersen, Costa, Crowley, Erickson, Hatfield, Southworth
NAYS:
ABSTENTIONS:
ABSENT: Drake

ATTEST:

Recording Secretary

S:___Development Projects\WDM Parks\Pinedale Park\SP-003987-2018_SR_Pinedale Park Improvement_PZ_08-27-2018.docx

EXHIBIT A
CONDITIONS OF APPROVAL

1. None

ATTACHMENT B

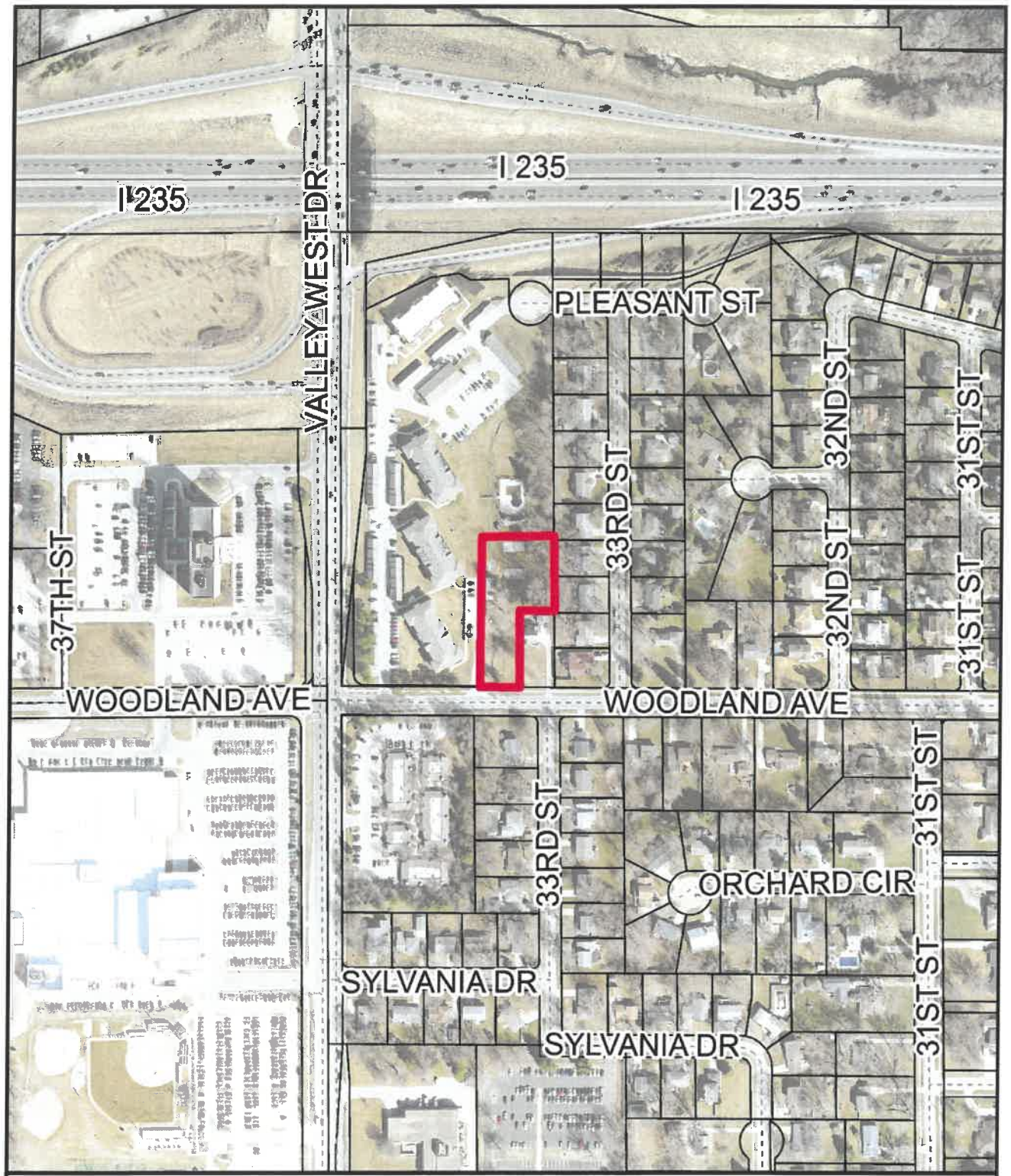

THE CITY OF West Des Moines.

Pinedale Park

NOT TO SCALE

S:___Development Projects\WDM Parks\Pinedale Park\SP-003987-2018_SR_Pinedale Park Improvement_PZ_08-27-2018.docx

ATTACHMENT C

CITY OF WEST DES MOINES

PINEDALE PARK MASTER PLAN

3375 WOODLAND AVE - WEST DES MOINES, IA

0 15 30 60 Feet

PINEDALE PARK IMPROVEMENTS

3375 WOODLAND AVE
WEST DES MOINES, IOWA
PROJECT # 0510 084 2017

VICINITY & ZONING MAP

APPLICANT

CITY OF WEST DES MOINES
PARKS & RECREATION DEPT.
CONTACT: KEVIN CONN
4200 MILLS CIVIC PKWY
WEST DES MOINES, IA 50265
(515) 222-3449 ph.
(515) 222-3459 fax

OWNERS

CITY OF WEST DES MOINES
PARKS & RECREATION DEPT.
ATTN: SALLY ORTGIES
4200 MILLS CIVIC PKWY
WEST DES MOINES, IA 50265
(515) 222-3444 ph.
(515) 222-3459 fax

LAND USE

EXISTING: PG -
PUBLIC GREENWAY

PROPOSED: PG -
PUBLIC GREENWAY

ZONING

EXISTING: RM - RESIDENTIAL
MEDIUM DENSITY DISTRICT

PROPOSED: RM - RESIDENTIAL
MEDIUM DENSITY DISTRICT

BENCH MARKS

WDM N0. 063
Intersection of 35th Street/Valley West Drive and Ashworth Road, Northeast corner of intersection, 59.5 feet East of centerline of 35th Street, 65.0 feet North of centerline of Ashworth Road.
Standard benchmark elevation = 165.76 (West Des Moines Datum)

WDM N0. 074
Intersection of 22nd Street and Center Street, Northeast corner of intersection, 34.5 feet North of centerline of Center Street, 38 feet East of centerline of 22nd Street standard benchmark elevation = 104.76 (West Des Moines Datum)

LT LEON ASSOCIATES · INC

THE CITY OF WEST DES MOINES

CONTACT INFO

KEVIN CONN
Landscape Architect
CITY OF WEST DES MOINES
4200 MILLS CIVIC PKWY.
WEST DES MOINES, IA 50265
(515) 222-3449

SHEET INDEX

SHEET #	DESCRIPTION
L1	TITLE SHEET
L2 - L2.1	ESTIMATED QUANTITIES & REFERENCE NOTES
L3	SITE SURVEY
L4	REFERENCE PLAN
L5	DEMOLITION PLAN
L6	LAYOUT PLAN
L7	GRADING/UTILITY PLAN
D1-D3	DETAILS
	STEP POOL STORMWATER CONVEYANCE (SPSC)
C1	DRAINAGE PLAN
C2	SPSC - PLAN & PROFILE - ADD ALTERNATE #1
C3	TYPICAL DETAIL
C4	PLANTING PLAN - ADD ALTERNATE #1

IOWA ONE CALL
CALL AT LEAST 48 HOURS BEFORE YOU DIG!
www.iowaonecall.com
1-800-292-8989

PROFESSIONAL LANDSCAPE ARCHITECT
KEVIN J. CONN
00427
IOWA

I HEREBY CERTIFY THAT THE PORTION OF THIS TECHNICAL SUBMISSION DESCRIBED BELOW WAS PREPARED BY ME OR UNDER MY DIRECT SUPERVISION AND RESPONSIBLE CHARGE. I AM A DULY LICENSED PROFESSIONAL LANDSCAPE ARCHITECT UNDER THE LAWS OF THE STATE OF IOWA.

KEVIN J. CONN, PLA, ASLA — DATE

MY LICENSE RENEWAL DATE IS JUNE 30, 2019
PAGES OR SHEETS COVERED BY THIS SEAL:

LICENSED PROFESSIONAL ENGINEER
LUIS T. LEON
18685
IOWA

I hereby certify that this engineering document was prepared by me or under my direct personal supervision and that I am a duly licensed Professional Engineer under the laws of the State of Iowa.

Signature — Date
Luis T. Leon, P.E.
Iowa License Number 18685
My license renewal date is December 31, 2019.

Pages or sheets covered by this seal:

LEGAL DESCRIPTION

WOODLAND PARK PLAZA PLAT 1

COMMENCING AT A POINT OF REFERENCE AT THE SW CORNER OF LOT 1 OF SAID WOODLAND PARK PLAZA PLAT 1; THENCE N00°54'46"W, 2.00 FEET ALONG THE WEST LINE OF SAID LOT 1 TO THE POINT OF BEGINNING; THENCE N89°48'22"W, 90.14 FEET TO A POINT; THENCE N00°13'30"E, 340.45 FEET TO A POINT; THENCE N89°03'22"E, 163.29 FEET TO A POINT ON THE WEST LINE OF SAID LOT 4; THENCE S00°56'38"E, 171.05 FEET ALONG SAID WEST LINE TO THE NE CORNER OF SAID LOT 1; THENCE N89°38'32"W, 80.04 FEET ALONG THE NORTH LINE OF SAID LOT 1 TO THE NW CORNER OF SAID LOT 1; THENCE S00°54'46"E, 174.94 FEET ALONG THE WEST LINE OF SAID LOT 1 TO THE POINT OF BEGINNING AND CONTAINING 0.992 ACRES (43,213 SQUARE FEET).

DEVELOPMENT SUMMARY

SITE AREA

WOODLAND PARK PLAZA PLAT 1 = .992 ACRES

LANDSCAPING CALCULATIONS

Required Open Space (25%) =	10,554 sf
Required Trees =	(10,554 sf/3,000) x 2 = 7
Existing/Provided Trees =	19 (10 Evergreen, 9 Deciduous)
Required Shrubs =	(10,554 sf/3,000) x 3 = 11
Existing/Provided Shrubs =	30

BUILDING INFORMATION

Building Size (14' x 14') =	196.0 SF
Building Use =	Outdoor Shelter

PARKING INFORMATION

Existing Parking =	5
Parking Required =	0
Total Parking Provided =	4
ADA Parking Provided =	1

DEFINED AREAS

Total Lot Area =	43,213 SF (0.992 ac) - 100%
Total Paved Area (Impervious) =	6,048.25 SF (.21 ac) - 14%
Total Open Space =	37,164.75 SF (.78 ac) - 86%

UTILITY CONTACTS

AT & T Broadband
Cliff Stockwell
(515) 246-2252

AT & T Communications
Jamie Frederick
(515) 246-2253

Centurylink
Ken Hoffman
(515) 943-3396

Hickory Tech Comm
Weston Grow
(515) 867-4769

Mediacom
Paul May
(515) 554-2648

Mid American Energy
(Electric)
Gail Davis
(515) 281-2619

Mid American Energy
(Gas)
Gail Davis
(515) 281-2619

WDM Engineering Services
(Construction)
Clint Carpenter
(515) 222-3539

WDM Public Works
(Traffic)
Rick Knowles
(515) 222-3480

WDM Water Works
Bruce Mabuce
(515) 222-3510

BASE BID - ESTIMATED PROJECT QUANTITIES

ITEM NO.	ITEM DESCRIPTION	UNIT	ESTIMATED QUANTITIES	AS BUILT QUANTITIES
1. GENERAL CONSTRUCTION				
1.1	MOBILIZATION	LS	1	
1.2	SURVEY AND LAYOUT	LS	1	
2. EARTHWORK				
2.1	GRADING AND EXCAVATION	CY	540	
2.2	SOIL IMPORT	CY	375	
3. PAVEMENT AND RELATED WORK				
3.1	PAVEMENT REMOVAL & DISPOSAL	SF	2364	
3.2	5 IN. REINFORCED PCC W/ 6 IN. PREPARED SUBGRADE	SF	4933	
3.3	CONCRETE WASHOUT, ROLLOFF	EA	1	
4. SITEWORK AND LANDSCAPING				
4.1	CONVENTIONAL SEEDING, FERTILIZER AND MULCH	SF	10,434	
4.2	1 EVERGREEN, 3 UNDERSTORY & 3 SHRUB REMOVAL & DISPOSAL	LS	1	
4.3	SILT FENCE	LF	270	
4.4	STABILIZED CONSTRUCTION ENTRANCE	LS	1	
5. STORMWATER ROCK RIFFLE STRUCTURE				
5.1	CLASS 10 EXCAVATION, COMMON EXCAVATION	CY	260	
5.2	MACADAM STONE	TON	30	
5.3	REVETMENT, EROSION STONE	TON	10	
5.4	REVETMENT, CLASS D	TON	105	
5.5	SUBDRAIN, 8-INCH	LF	85	
5.6	SUBDRAIN CLEANOUT, TYPE A-2, 8-INCH	EA	1	
5.7	SEEDING, MULCHING, WATERING (NATIVE GRASS MIX)	AC	.1	
5.8	SEEDING, MULCHING, WATERING (TURF SEED MIX)	AC	.05	
5.9	COMPOST	SY	140	
6. 2-12 AGE PLAYGROUND				
6.1	PLAY EQUIPMENT, PURCHASE & DELIVERY, 2-12 PLAYGROUND	LS	1	
6.2	PLAY EQUIPMENT INSTALLATION, 2-12 PLAYGROUND	LS	1	
6.3	8 IN. PCC EDGE RESTRAINT, 2-12 PLAYGROUND (12 IN. HEIGHT)	LF	198	
6.4	4 IN. SUBDRAIN, 2-12 PLAYGROUND	LF	116	
6.5	UNITARY RUBBER TILES, 2-12 PLAYGROUND	SF	985	
6.6	RUBBER TILE BASE, 5 IN. REINFORCED PCC W/ TURN DOWN EDGES	SF	985	
6.7	ENGINEERED WOOD FIBER SYSTEM, 12" DEPTH, 2-12 PLAYGROUND	SF	2391	
7. SHELTER				
7.1	SHELTER SUPPLY & DELIVERY	LS	1	
7.2	SHELTER FOOTINGS, 2' DIA. X 4' DEPTH	EA	2	
7.3	SHELTER INSTALLATION	LS	1	
8. SPECIAL				
8.1	BASKETBALL GOAL, POST & FOOTING	LS	1	
8.2	MULTI-USE COURT STRIPING	LS	1	
8.3	PARKING LOT RESTRIPING	LS	1	

ADD ALTERNATE #1 - ESTIMATED PROJECT QUANTITIES
STEP POOL STORMWATER CONVEYANCE (SPSC)

ITEM NO.	ITEM DESCRIPTION	UNIT	ESTIMATED QUANTITIES
ALT 1.01	CLASS 10 EXCAVATION, COMMON EXCAVATION	CY	290
ALT 1.02	CHOKER AGGREGATE, 6-INCH LAYER	TON	10
ALT 1.03	AGGREGATE SUBBASE	TON	30
ALT 1.04	BOULDERS, 3.5"x2.5"x1.5"	TON	50
ALT 1.05	REVETMENT, EROSION STONE	TON	70
ALT 1.06	REVETMENT, CLASS D	TON	26
ALT 1.07	SUBDRAIN, 8-INCH	LF	55
ALT 1.08	SUBDRAIN CLEANOUT, TYPE A-2, 8-INCH	EA	1
ALT 1.09	SAND/WOOD CHIP MIX	CY	70
ALT 1.10	PLANTING, MULCHING, AND WATERING (NATIVE PLUGS)	EA	363
ALT 1.11	SEEDING, MULCHING, & WATERING (NATIVE GRASS MIX)	AC	.05
ALT 1.12	SEEDING, MULCHING, & WATERING (LAWN SEED MIX)	AC	.05
ALT 1.13	COMPOST	SY	250

ADD ALTERNATE #2 - ESTIMATED PROJECT QUANTITIES
SITE FURNITURE

ITEM NO.	ITEM DESCRIPTION	UNIT	ESTIMATED QUANTITIES
ALT 2.1	BENCHES	EA	3
ALT 2.2	LOOP BIKE RACKS	EA	2
ALT 2.3	TRASH RECEPTACLE	EA	2
ALT 2.3	PICNIC TABLE, ADA COMPLIANT	EA	1

ESTIMATED REFERENCE INFORMATION

ITEM NO.	DESCRIPTION
1.2	SURVEY AND LAYOUT (LS) a. INCLUDES ALL MATERIAL, EQUIPMENT AND LABOR NECESSARY FOR SURVEYING AND LAYOUT OF PROJECT. b. CONTRACTOR RESPONSIBLE FOR MAINTAINIG ALL HORIZONTAL AND VERTICAL CONTROL WITHIN PROJECT LIMITS DURING CONSTRUCTION. c. VERIFY ALL SIDEWALK ALIGNMENTS WITH THE CITY PRIOR TO CONSTRUCTION.
2.1	GRADING AND EXCAVATION (CY) a. INCLUDES ALL MATERIAL, EQUIPMENT AND LABOR NECESSARY TO ACHIEVE PROPER GRADES AS SHOWN ON PLANS b. NO PAYMENT FOR OVERHAUL SHALL BE ALLOWED. c. INCLUDED IN BID ITEM IS: - STRIPPING, STOCKPILING, AND RESPREADING OF TOPSOIL - EXCAVATION, FILL AND COMPACTION TO ACHIEVE PROPOSED GRADES - BACKFILLING TO TOP OF NEW PAVEMENT - FINISH GRADE OF DISTURBED AREAS IN PREPARATION FOR FINAL SEEDING. d. NEWLY PLACED FILL ON THE EXISTING SLOPES SHALL BE ADEQUATELY BENCHED IN ORDER TO INTEGRATE THE NEW EMBANKMENT WITH THE EXISTING TERRAIN. e. ALL EXCESS MATERIAL SHALL BECOME THE PROPERTY OF THE CONTRACTOR. REMOVAL b AND DISPOSAL OF EXCESS MATERIAL SHALL BE CONSIDERED INCIDENTAL. f. MEASUREMENT FOR EARTHWORK SHALL BE PLAN QUANTITY WITHOUT FINAL MEASUREMENT.
3.1	PAVEMENT REMOVAL & DISPOSAL a. INCLUDES ALL MATERIAL, EQUIPMENT AND LABOR NECESSARY FOR REMOVAL AND DISPOSAL OF HMA AND PCC PAVEMENT. b. ALL PAVEMENT REMOVED FROM THE PROJECT SHALL BECOME THE PROPERTY OF THE CONTRACTOR. c. ALL FULL DEPTH SAW CUTTING FOR REMOVALS SHALL BE CONSIDERED INCIDENTAL.
3.2	5 INCH REINFORCED PCC W/ 6 INCH PREPARED SUBGRADE (SF) a. INCLUDES ALL MATERIAL, EQUIPMENT AND LABOR NECESSARY FOR INSTALLATION OF 5 INCHES OF REINFORCED PCC PAVEMENT WITH 6 INCHES OF PREPARED SUBGRADE. b REINFORCEMENT, SAWCUTS AND SUBGRADE PREP SHALL BE CONSIDERED INCIDENTAL. c. REFER TO SHEET 8A FOR DETAIL
3.3	CONCRETE WASHOUTS (EA) a. INLCUDES DELIVERY, VACUUM SERVICE, CLEANOUT AND REMOVAL OF THE WASHOUT. b. ITEM SHALL BE CONCRETE WASHOUT SYSTEMS, INC. ROLL-OFFS OR APPROVED EQUAL. c. THE CONTRACTOR SHALL DETERMINE MOST SUITABLE LOCATION FOR THE WASHOUTS. d. DISPOSAL OF ALL WASHOUT MATERIAL SHALL BE CONSIDERED INCIDENTAL.

ESTIMATED REFERENCE INFORMATION

ITEM NO.	DESCRIPTION
4.1	CONVENTIONAL SEEDING, FERTILIZER AND ROLLED EROSION CONTROL PRODUCT (SF) a. INCLUDES ALL MATERIAL, EQUIPMENT AND LABOR NECESSARY FOR FINAL SEEDING OF DISTURBED AREAS. b. USE SUDAS TYPE 1 SEED MIX & ROLLED EROSION CONTROL PRODUCT (RECP) FOR ALL PERMANENT AREAS. c. USE OF A WATER HYDRANT (PRIVATE OR PUBLIC) WILL REQUIRE THE USE OF A WATER METER. CONTACT WEST DES MOINES WATER WORKS (222-3465) TO ARRANGE.
4.2	TREE/SHRUB REMOVAL (EA) a. INCLUDES ALL MATERIAL, EQUIPMENT, AND LABOR NECESSARY FOR REMOVAL AND DISPOSAL OF (1) EVERGREEN TREE, (3) UNDERSTORY TREES, & (3) SHRUBS. b. ALL PLANT MATERIAL REMOVED FROM THE PROJECT SHALL BECOME THE PROPERTY OF THE CONTRACTOR. c. ALL SAW CUTTING FOR REMOVALS SHALL BE CONSIDERED INCIDENTAL.
4.3	SILT FENCE. (LF) a. INCLUDES PLACEMENT, MAINTENANCE, AND REMOVAL OF SILT FENCE. b. REMOVAL OF ACCUMULATED MATERIAL SHALL BE CONSIDERED INCIDENTAL. c. REFER TO SHEET 8C FOR DETAIL.
6.1	PLAY EQUIPMENT, PURCHASE & DELIVERY, 2-12 PLAYGROUND(LS) a. ITEM IS FOR FURNISHING AND COORDINATING DELIVERY OF 2-12 PLAY EQUIPMENT. b. PLAY EQUIPMENT TO BE BY MIRACLE OR APPROVED SUBSTITUTE. c. REFER TO SPECIFICATIONS FOR EQUIPMENT TYPE.
6.2	PLAY EQUIPMENT INSTALLATION, 2-12 PLAYGROUND (LS) a. INSTALL PLAY EQUIPMENT ACCORDING TO MANUFACTURERS SPECIFICATIONS AND CPSC GUIDELINES
6.3	8 INCH PCC EDGE RESTRAINT, 12 INCH DEPTH, 2-12 PLAYGROUND (LF) a. INCLUDES ALL MATERIAL, EQUIPMENT AND LABOR NECESSARY FOR INSTALLING EDGE RESTRAINT AROUND 2-12 PLAYGROUND. b. SAWCUT EVERY 10' TO ALLOW FOR MOVEMENT c. REINFORCEMENT, SAWCUTS AND SUBGRADE PREP SHALL BE CONSIDERED INCIDENTAL. d. REFER TO SHEET D1 FOR DETAIL
6.4	4 INCH SUBDRAIN, 2-12 PLAYGROUND (LF) a. INCLUDES ALL MATERIAL, EQUIPMENT AND LABOR NECESSARY FOR INSTALLING 4 INCH SUBDRAIN WITHIN 2-12 PLAYGROUND. b. ALL CLEANOUTS, FITTINGS, GRANULAR PIPE BEDDING, APRONS AND APRON FOOTINGS SHALL BE CONSIDERED INCIDENTAL. C. REFER TO SHEET D1 FOR DETAIL
6.5	UNITARY RUBBER TILE SURFACING, 2-12 PLAYGROUND (SF) a. INCLUDES ALL MATERIAL, EQUIPMENT AND LABOR NECESSARY FOR INSTALLING RUBBER TILE SURFACING WITHIN 2-12 PLAYGROUND. b. TILE THICKNESS VARIES, REFER TO SPECIFICATIONS FOR THICKNESS c. INSTALL ACCORDING TO MANUFACTURERS SPECIFICATIONS d. TILE SURFACING SHALL BE UNITY SURFACING SYSTEM TILES OR APPROVED SUBSTITUTE.
6.6	RUBBER TILE BASE, 5 INCH REIN. PCC W/ TURN DOWN EDGE (SF) a. INCLUDES ALL MATERIAL, EQUIPMENT AND LABOR NECESSARY FOR INSTALLING PCC BASE PAD WITHIN 2-12 PLAYGROUND. b. REINFORCEMENT, SAWCUTS AND SUBGRADE PREP SHALL BE CONSIDERED INCIDENTAL. c. REFER TO SHEET D1 FOR DETAIL.
6.7	ENGINEERED WOOD FIBER SURFACING SYSTEM, 2-12 PLAYGROUND(SF) a. INCLUDES ALL MATERIAL, EQUIPMENT AND LABOR NECESSARY FOR INSTALLING LOOSE-FILL SURFACING WITHIN 2-12 PLAYGROUND b. ASSOCIATED PEAGRAVEL DRAINAGE LAYER AND GEOTEXTILE FABRIC SHALL BE CONSIDERED INCIDENTAL TO ITEM. c. ENGINEERED WOOD MULCH WITHIN 2-12 PLAYGROUND SHALL BE A MINIMUM DEPTH OF 12 INCHES (UNCOMPACTED) d. MANUFACTURER BY FIBAR SYSTEMS OR APPROVED EQUAL e. REFER TO SHEET D1 FOR DETAIL.
7.1	SHELTER SUPPLY & DELIVERY (LS) a. ITEM IS FOR FURNISHING AND COORDINATING DELIVERY OF STEEL SHELTER. b. PLAY EQUIPMENT TO BE BY COVERWORX OR APPROVED SUBSTITUTE. c. REFER TO SPECIFICATIONS FOR EQUIPMENT TYPE.
7.2	SHELTER FOOTINGS, 2' DIA. X 4' DEPTH (EA) a. INCLUDES ALL MATERIAL, EQUIPMENT AND LABOR NECESSARY FOR INSTALLATION OF 2' DIAMETER X 4' DEEP REINFORCED CONCRETE FOOTINGS. b REINFORCEMENT, SAWCUTS AND SUBGRADE PREP SHALL BE CONSIDERED INCIDENTAL. c. REFER TO SHEET 8A FOR DETAIL
7.3	SHELTER INSTALLATION (LS) a. INSTALL SHELTER ACCORDING TO MANUFACTURERS SPECIFICATIONS.
8.1	BASKETBALL GOAL, POST & FOOTING a. INCLUDES ALL MATERIAL, EQUIPMENT AND LABOR NECESSARY FOR INSTALLATION OF BASKETBALL GOAL, POST & FOOTING. b. INSTALL GOAL ACCORDING TO MANUFACTURERS SPECIFICATIONS.
ALT 1.01- ALT 2.3	ALTERNATES a. REFER TO SHEETS C1-C2 & 8A-8C AND SPECIFICATIONS FOR TYPE AND LOCATION OF BID ALTERNATES.

CITY OF WEST DES MOINES
DEPARTMENT OF PARKS AND RECREATION
PARK DEVELOPMENT

4200 MILLS CIVIC PKWY (515) 222-3444
WEST DES MOINES, IOWA 50265
FAX NO. (515) 222-3469

THE CITY OF WEST DES MOINES

REVISION	DATE
SUB #1	7/16/18

DATE 8/7/18

IOWA

PINEDALE PARK

WEST DES MOINES

DRAWN: M.L.G
REVIEWED: K.J.C.
SCALE -
TITLE ESTIMATED QUANTITIES
SHEET L2

SHEET	TITLE	SCALE	DRAWN:		DATE
L3	SITE SURVEY	1"=50'-0"	M.L.G REVIEWED: K.J.C.	PINEDALE PARK WEST DES MOINES IOWA	8/7/18

REVISION	DATE
SUB #1	7/16/18

THE CITY OF WEST DES MOINES

CITY OF WEST DES MOINES
DEPARTMENT OF PARKS AND RECREATION
PARKS DIVISION

4200 MILLS CIVIC PKWY (515) 222-3444
WEST DES MOINES, IOWA 50265
FAX NO. 95150 222-3459

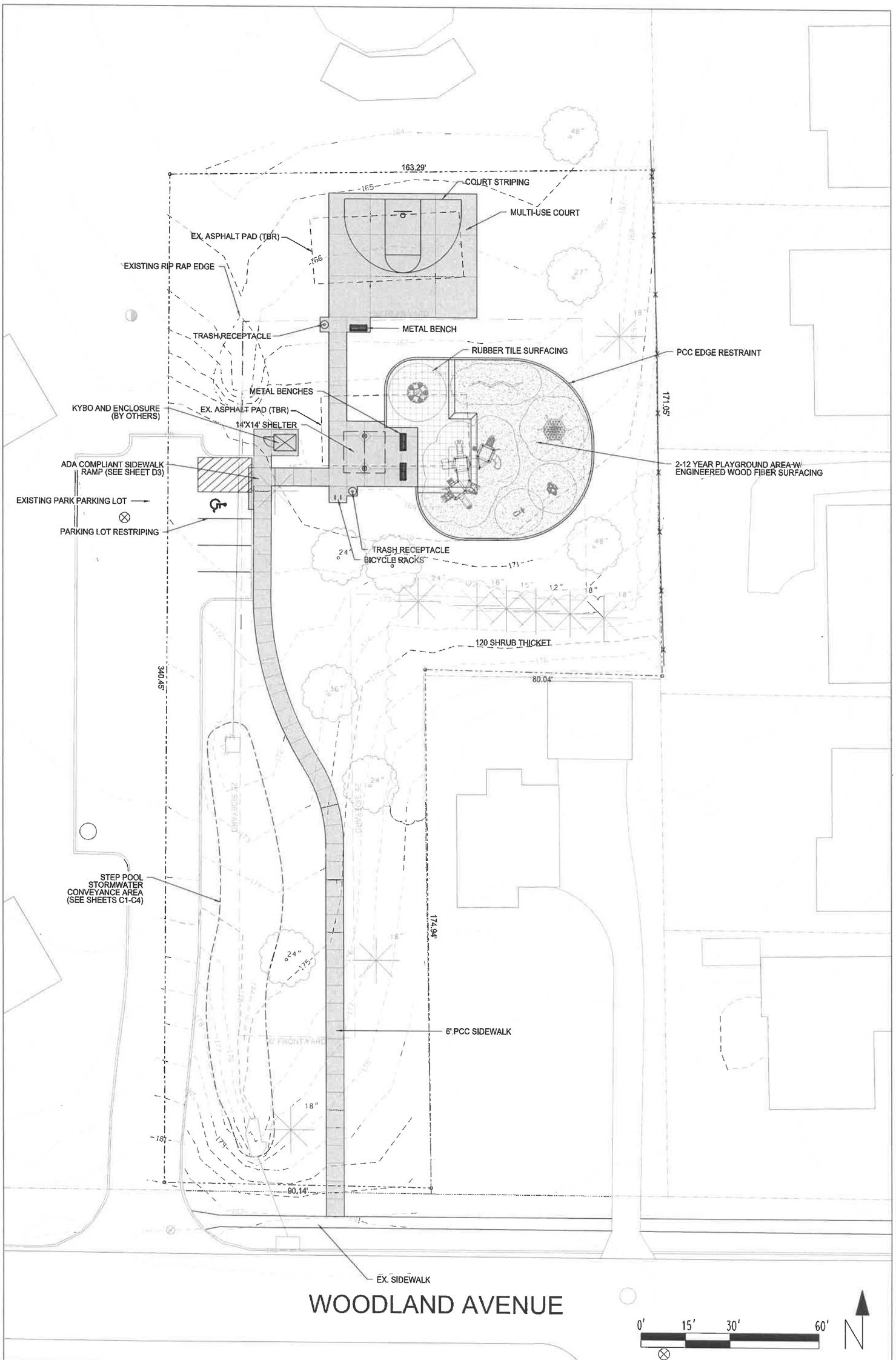

SHEET	TITLE	SCALE	DRAWN:	PINEDALE PARK	DATE	REVISION	DATE
L4	REFERENCE PLAN	1"=30'-0"	M.L.G REVIEWED: K.J.C.	WEST DES MOINES IOWA	8/7/18	SUB #1	7/16/18

THE CITY OF WEST DES MOINES

CITY OF WEST DES MOINES
DEPARTMENT OF PARKS AND RECREATION
PARKS DIVISION

4200 MILLS CIVIC PKWY (515) 222-3444
WEST DES MOINES, IOWA 50265
FAX. NO. 95150 222-3459

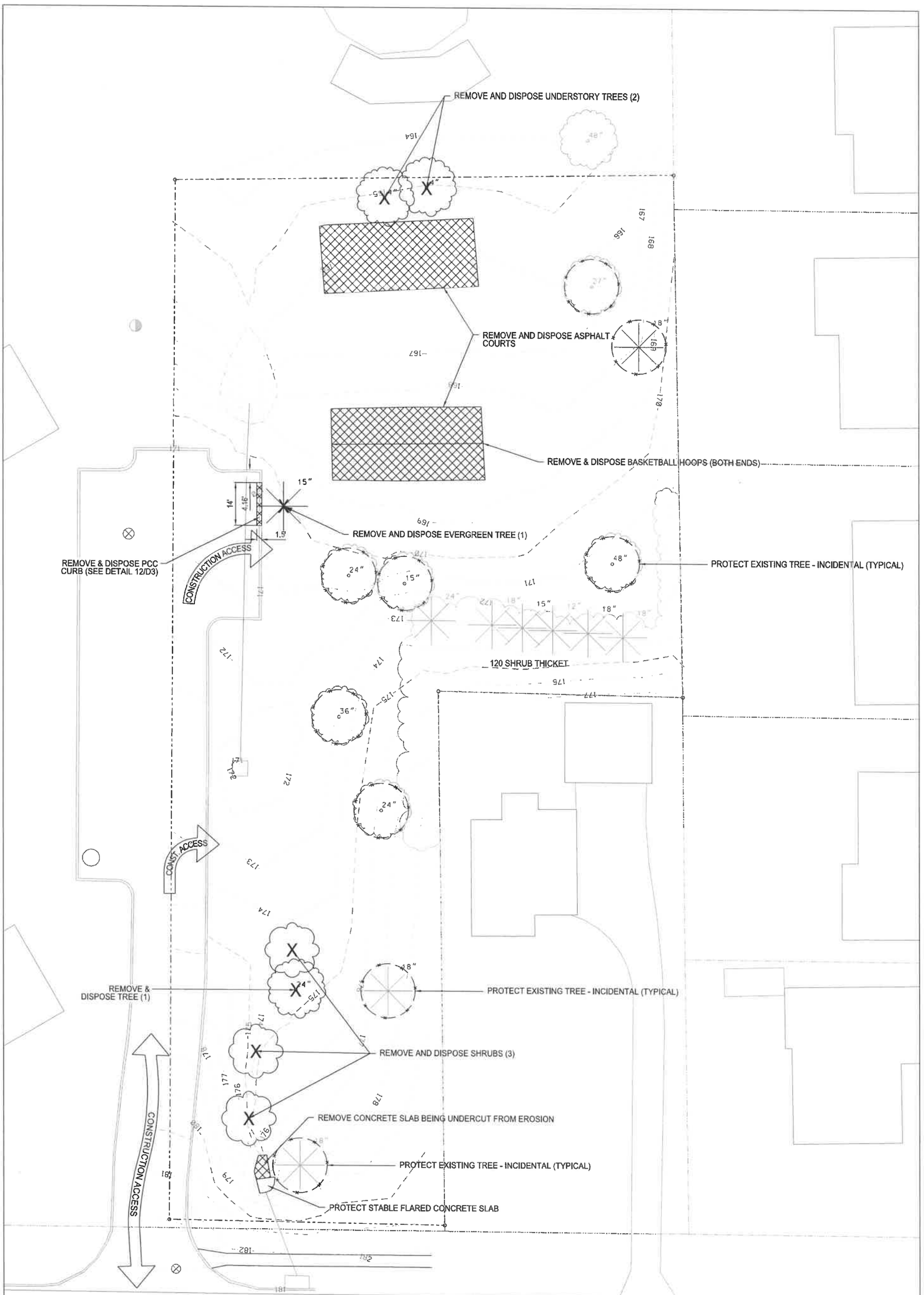

WOODLAND AVENUE

0' 15' 30' 60'

N

SHEET	TITLE	SCALE	DRAWN:		DATE
L5	DEMOLITION PLAN	1"=30'-0"	M.L.G REVIEWED: K.J.C.	PINEDALE PARK WEST DES MOINES IOWA	8/7/18

REVISION	DATE
SUB #1	7/16/18

THE CITY OF WEST DES MOINES

CITY OF WEST DES MOINES
DEPARTMENT OF PARKS AND RECREATION
PARKS DIVISION

4200 MILLS CIVIC PKWY (515) 222-3444
WEST DES MOINES, IOWA 50265
FAX. NO. 86190 222-3459

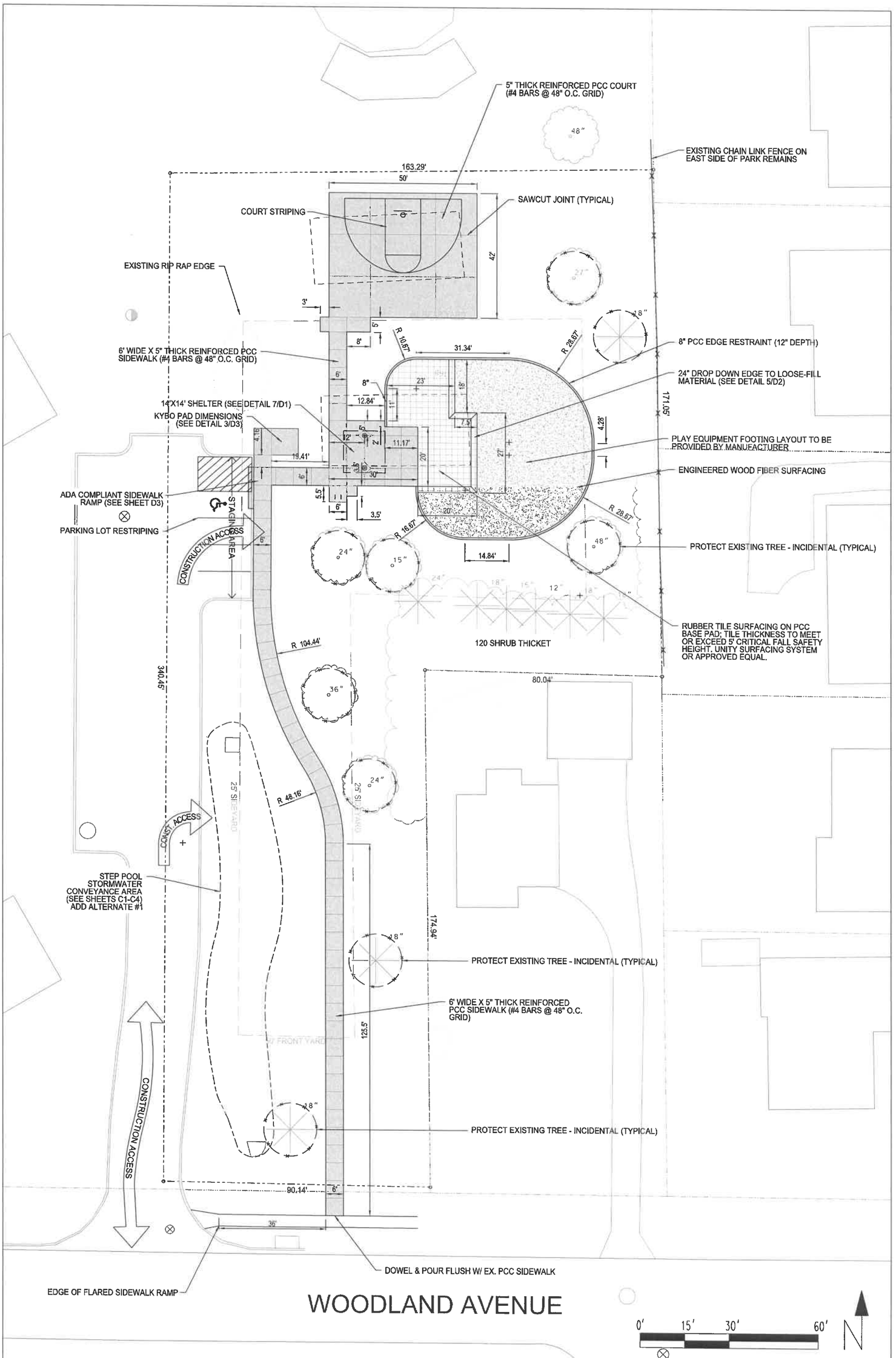

SHEET	TITLE	SCALE	DRAWN:		DATE
L6	LAYOUT PLAN	1"=30'-0"	M.L.G REVIEWED: K.J.C.	PINEDALE PARK WEST DES MOINES IOWA	8/7/18

REVISION	DATE
SUB #1	7/16/18

THE CITY OF WEST DES MOINES

CITY OF WEST DES MOINES
DEPARTMENT OF PARKS AND RECREATION
PARKS DIVISIOIN

4200 MILLS CIVIC PKWY. (515) 222-3444
WEST DES MOINES, IOWA 50265
FAX. NO. 05150 222-3459

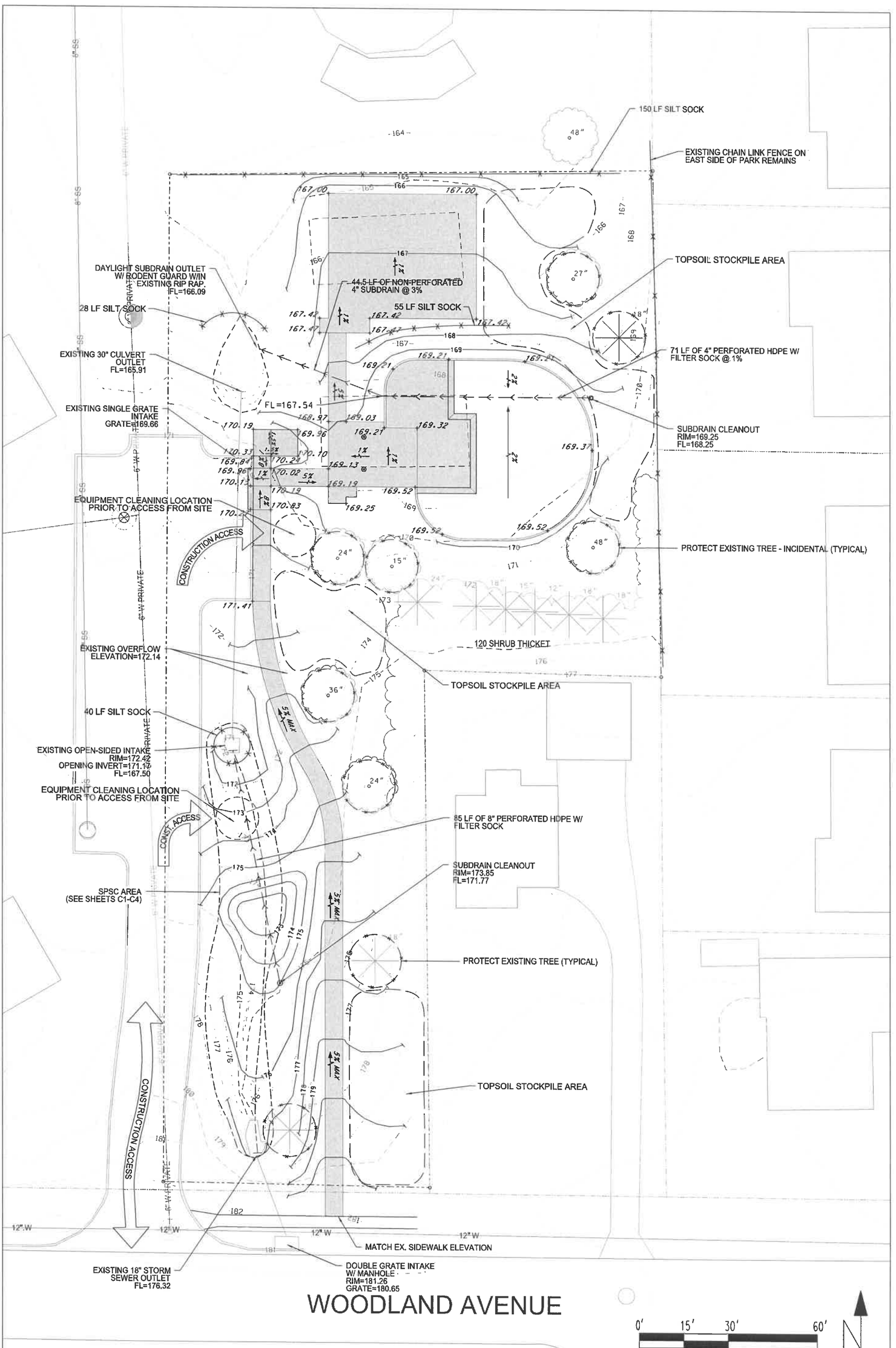

SHEET	TITLE	SCALE	DRAWN:		DATE
L7	GRADING/ UTILITY PLAN	1"=30'-0"	M.L.G REVIEWED: K.J.C.	PINEDALE PARK WEST DES MOINES IOWA	8/7/18

REVISION	DATE
SUB #1	7/16/18

THE CITY OF WEST DES MOINES
CITY OF WEST DES MOINES
DEPARTMENT OF PARKS AND RECREATION
PARKS DIVISIOIN
4200 MILLS CIVIC PKWY (515) 223-3444
WEST DES MOINES, IOWA 50265
FAX, NO. 05150 223-3459

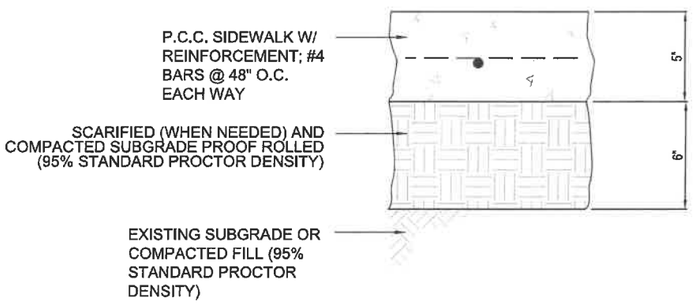

6 / D1 — 6" REINFORCED WALK
N.T.S.

NOTE: ALL CONCRETE TO BE BROOM FINISHED

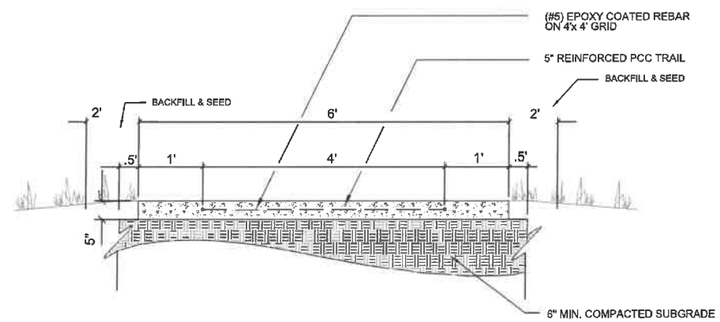

4 / D1 — 6" REINFORCED WALK
N.T.S.

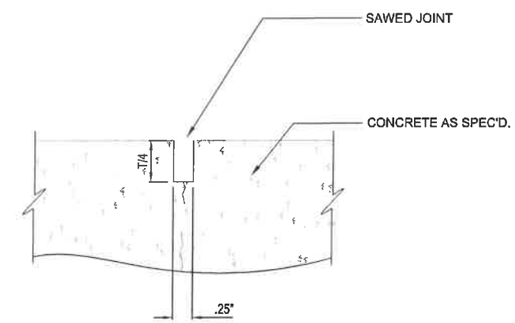

1 / D1 — SAW CUT JOINT, TYP.
N.T.S.

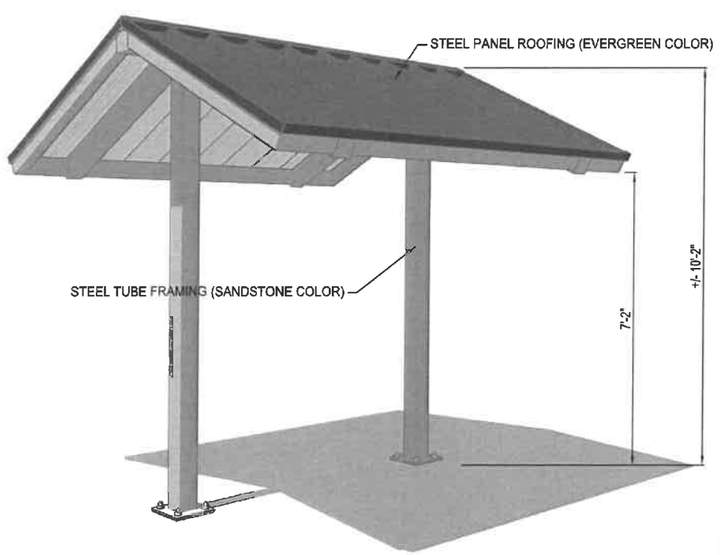

NOTE: DETAILED SPECIFICATIONS TO BE PROVIDED BY MANUFACTURER.

7 / D1 — COVERWORX SHELTER - MODEL # GA-1414-SW-2P
N.T.S.

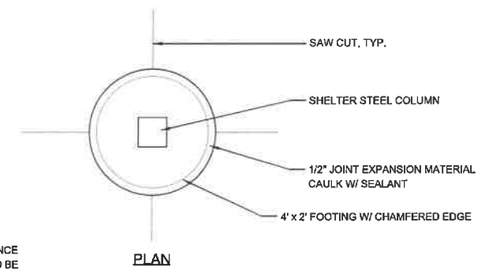

PLAN

NOTE:
SHELTER FOOTING FOR REFERENCE ONLY. FINAL FOOTING DESIGN TO BE PROVIDED BY SHELTER MANUFACTURER.

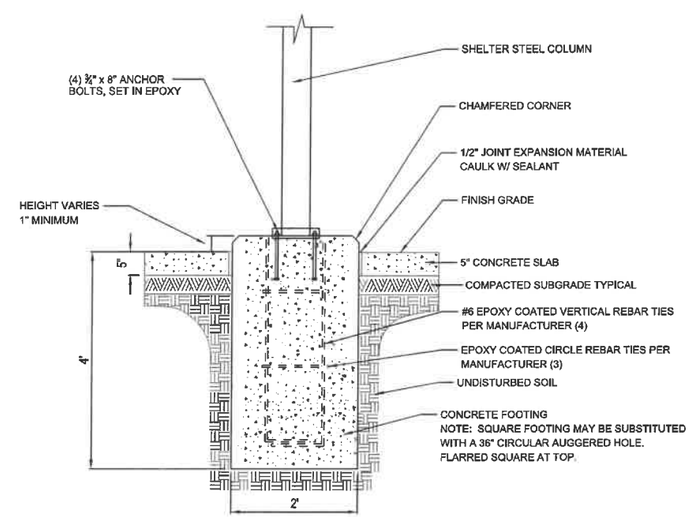

SECTION

5 / D1 — SHELTER COLUMN FOOTINGS
N.T.S.

NOTE: ALL CONSTRUCTION JOINTS TO BE DOWELED

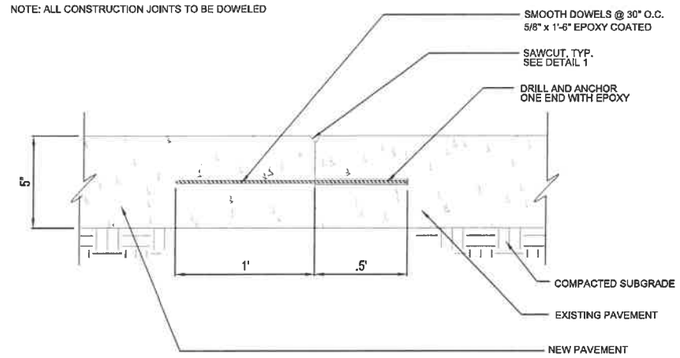

2 / D1 — CONSTRUCTION JOINT, TYP.
N.T.S.

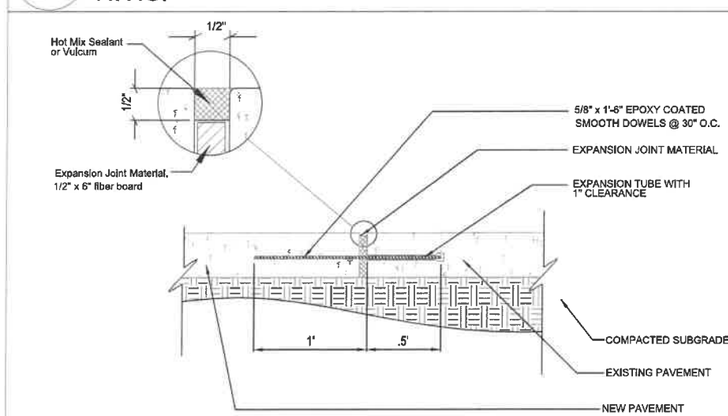

3 / D1 — 1/2" EXPANSION JOINT DETAIL, TYP.
N.T.S.

CITY OF WEST DES MOINES
DEPARTMENT OF PARKS AND RECREATION
PARKS DIVISION
4200 MILLS CIVIC PKWY (515) 222-3444
WEST DES MOINES, IOWA 50265
FAX NO. 515) 222-3459

THE CITY OF WEST DES MOINES

REVISION	DATE
SUB #1	7/16/18

DATE 8/7/18

IOWA

PINEDALE PARK

WEST DES MOINES

SHEET	TITLE	SCALE	DRAWN:	REVIEWED:
D1	DETAILS	–	M.L.G	K.J.C.

LEGEND

1. 1" x 5.5" Composite Wood Fence, Square Edge Board Butted with 1/4" Min. Gap, "Woodland Brown" Color. (Trex® or approved equal)
2. 3" Galvanized Steel Frame, Welded Joints To Be Ground Smooth, Powder-Coated Black
3. 3" Sq. Surfaced-Mounted Galvanized Steel Fence Posts, Powder-Coated Black
4. New Reinforced 5" PCC Pad (#4 Bars @ 48" Grid)

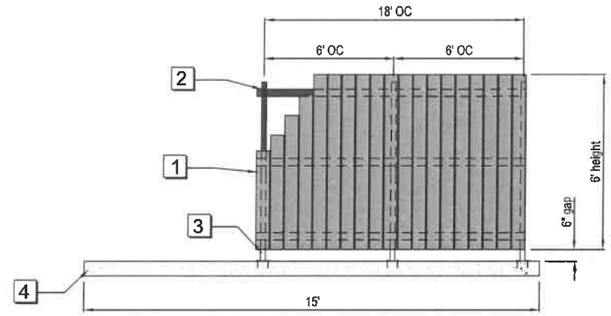

3 D2 KYBO ENCLOSURE ELEVEVATION: SIDE VIEW (BY OTHERS)
N.T.S.

LEGEND

1. Min. of (7) 3" Sq. Surfaced-Mounted Galvanized Steel Fence Posts w/ Cap, Powder-Coated Black
2. 1" x 5.5" Composite Wood Fence, Square Edge Board Butted with 1/4" Min. Gap, "Woodland Brown" Color. (Trex® or approved equal)
3. New Reinforced 5" PCC Pad (#4 Bars @ 48" Grid)
4. ADA portable restroom (size 7.5' x 5.5') (by others)

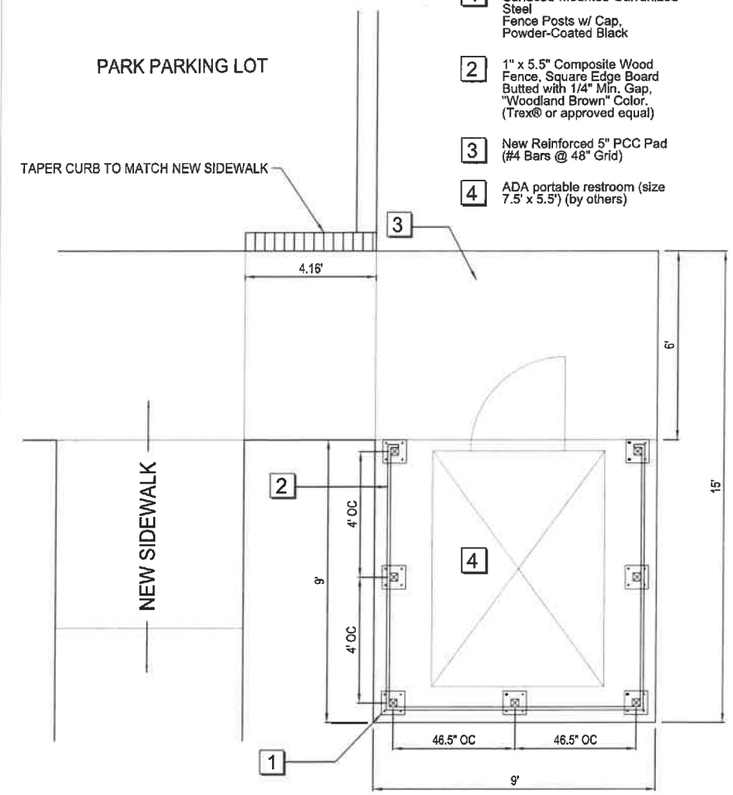

1 D2 KYBO ENCLOSURE PLAN (BY OTHERS)
N.T.S.

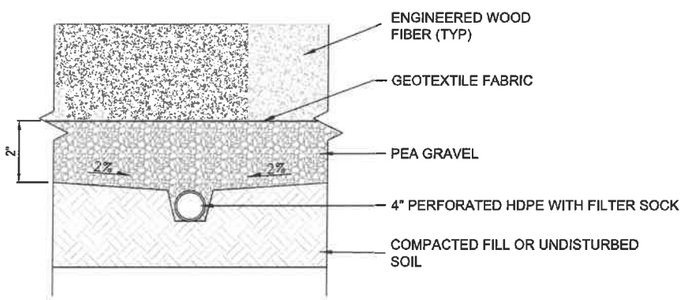

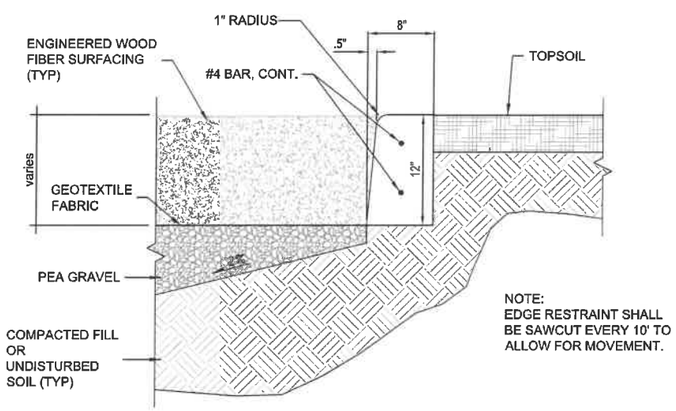

6 D2 PLAYGROUND SUBDRAIN & EDGE RESTRAINT
N.T.S.

LEGEND

Image taken at:

Prairie Ridge Sports Complex
1510 NW Ash Dr.
Ankeny, IA 50023

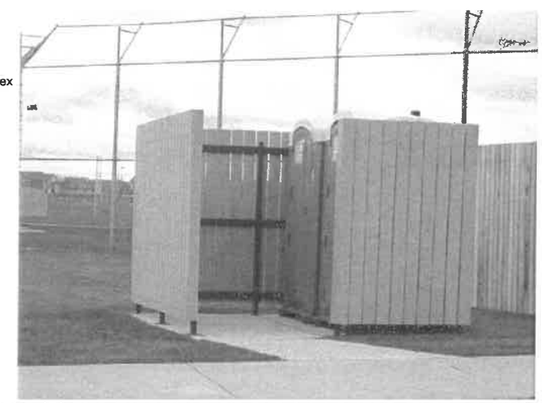

4 D2 KYBO ENCLOSURE IMAGE FOR REFERENCE (BY OTHERS)

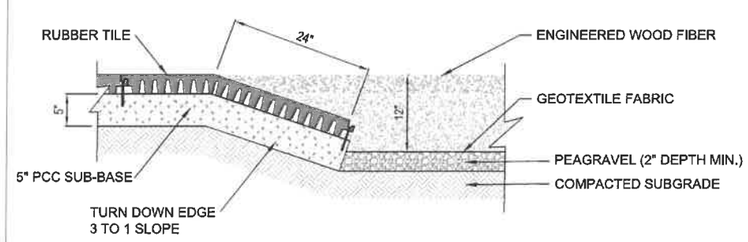

5 D2 TILE TO LOOSE-FILL SURFACING-TURN DOWN EDGE
N.T.S.

LEGEND

1. 1" x 5.5" Composite Wood Fence, Square Edge Board Butted with 1/4" Min. Gap, "Woodland Brown" Color. (Trex® or approved equal)
2. 3" Galvanized Steel Frame, Welded Joints To Be Ground Smooth, Powder-Coated Black
3. 3" Sq. Surfaced-Mounted Galvanized Steel Fence Posts, Powder-Coated Black
4. New Reinforced 5" PCC Pad (#4 Bars @ 48" Grid)

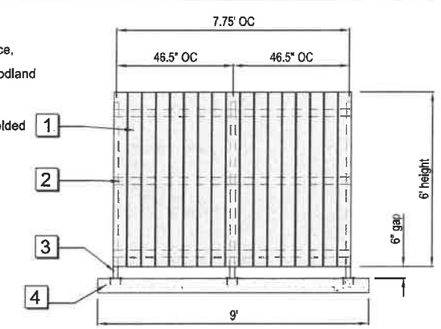

2 D2 KYBO ENCLOSURE ELEVEVATION: REAR VIEW (BY OTHERS)
N.T.S.

CITY OF WEST DES MOINES
DEPARTMENT OF PARKS AND RECREATION
PARKS DIVISION
4200 MILLS CIVIC PKWY (515) 222-3444
WEST DES MOINES, IOWA 50265
FAX NO. (515) 222-3469

THE CITY OF WEST DES MOINES

REVISION	DATE
SUB #1	7/16/18

DATE 8/7/18

IOWA

PINEDALE PARK

WEST DES MOINES

DRAWN: M.L.G
REVIEWED: K.J.C.
SCALE -
TITLE DETAILS
SHEET D2

LEGEND

PROPOSED PCC	COMPOST
RIPRAP	NATIVE GRASS
EROSION STONE	TURF GRASS
SUBDRAIN BACKFILL	

PROPOSED 8" SUBDRAIN
80 LF @ 3.00%

SUBDRAIN CLEANOUT
RIM=175.50
FL=170.40

INSTALL 3" DEEP
COMPOST WITH NATIVE
SEED OVER RIPRAP

INSTALL 3" DEEP
COMPOST WITH NATIVE
SEED OVER RIPRAP

173.67

174.67

176.53

171.56

171.23

171.67

171.56

172.67

176.53

176.20

10.00%

3.50%

0+00

1+00

1+37

PST

18" STORM
SEWER OUTLET
FL=176.32

EX. OPEN-SIDED INTAKE
RIM=172.42
OPENING INVERT (ALL 4 SIDES)=171.17
FL=167.50

ROCK RIFFLE
80 TON
CLASS D RIPRAP
SEE DETAIL

INSTALL SUBDRAIN
BACKFILL UP TO
SURFACE THROUGH
BOTTOM OF DRY POND.

END OF GULLY EROSION
FL=173.98

25 TON
CLASS D RIPRAP

PRELIMINARY
NOT FOR CONSTRUCTION

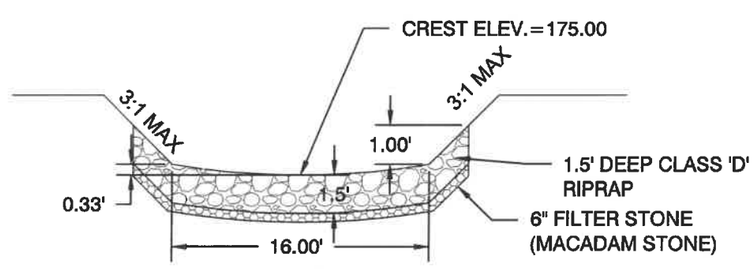

CROSS-SECTION A-A

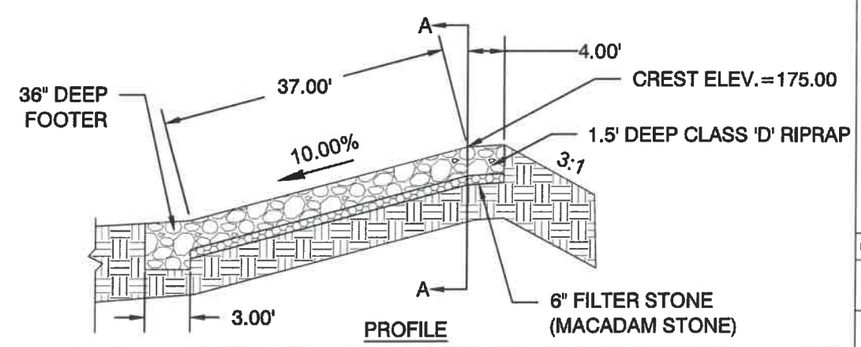

PROFILE

1 ROCK RIFFLE
NOT TO SCALE

IOWA ONE CALL
CALL 811 / 1-800-292-8989
2 Working Days BEFORE YOU DIG
DigSafeWait48.com

GRAPHIC SCALE
0 20' 40' 60'

NO.	REVISION	BY	DATE

DESIGNED: PDS
DRAFTED: BAY
CHECKED: LTL
SCALE: 1:20
PROJECT NO.: 011.013
FILE NUMBER: 011.013
SHEET NO.: C1
DATE: AUGUST 7, 2018

PINEDALE PARK IMPROVEMENTS
SP-003987-2018
WEST DES MOINES, IOWA
DRAINAGE PLAN

LT LEON ASSOCIATES INC
office 515-422-7108
www.ltleon.com
500 EAST LOCUST STREET SUITE 400
DES MOINES IOWA 50309

PROJECT NO. 011.013

DRAINAGE PLAN

SHEET NO.
C1

PROPOSED 8" SUBDRAIN
55 LF @ 3.00%

SUBDRAIN CLEANOUT
RIM=173.80
FL=169.20

POOL, TYP.

BOULDERS, TYP.

EROSION STONE, TYP.

PROTECT EXISTING CONCRETE APRON

0+00

1+00

1+40

CORE DRILL AND CONNECT TO EXISTING STRUCTURE.
FL=167.60

171.17

EX. OPEN-SIDED INTAKE
RIM=172.42
OPENING INVERT (ALL 4 SIDES)=171.17
FL=167.50

END OF GULLY EROSION
FL=173.98

18" STORM SEWER OUTLET
FL=175.32

26 TON CLASS D RIPRAP

LEGEND

PROPOSED PCC	EROSION STONE
RIPRAP	SAND/WOOD CHIP MIX
BOULDERS	CHOKER AGGREGATE
AGGREGATE SUBBASE	

GRAPHIC SCALE
0 10' 20' 30'

PRELIMINARY
NOT FOR CONSTRUCTION

PROPOSED GROUND @ ℄

1.5' CLASS D DEEP RIPRAP

EXISTING GROUND @ ℄

1' DEEP EROSION STONE, TYP

6" DEEP MIN. AGGREGATE SUBBASE, TYP.

BOULDER, TYP.

6" DEEP CHOKER AGGREGATE, TYP.

6" DEEP MIN. AGGREGATE SUBBASE, TYP.

SAND/WOOD CHIP MIX, TYP.

POOL 1 POOL 2 POOL 3 POOL 4 POOL 5

HORIZONTAL SCALE: 1"=10'
VERTICAL SCALE: 1"=2.5'

IOWA ONE CALL
CALL 811 / 1-800-292-8989
2 Working Days BEFORE YOU DIG
DigSafeWalt48.com

NO.	REVISION	BY	DATE

DESIGNED: LTL
DRAFTED: PDS
CHECKED: LTL
SCALE: 1:10
PROJECT NO: 011.013
FILE NUMBER: 011.013
SHEET NO.: C2
DATE: AUGUST 7, 2018

PINEDALE PARK IMPROVEMENTS
SP-003987-2018
WEST DES MOINES, IOWA
SPSC PLAN AND PROFILE

LT LEON ASSOCIATES INC
office 515-422-7016
www.ltleon.com
5100 EAST LOCUST STREET SUITE 400
DES MOINES IOWA 50320

PROJECT NO. 011.013

SPSC PLAN AND PROFILE

SHEET NO.
C2

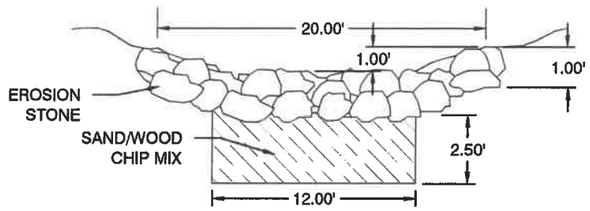

1 SPSC TYPICAL RIFFLE WEIR CROSS SECTION THROUGH EROSION STONE
NOT TO SCALE

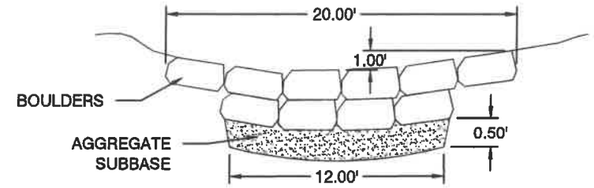

2 SPSC TYPICAL RIFFLE WEIR CROSS SECTION THROUGH BOULDERS
NOT TO SCALE

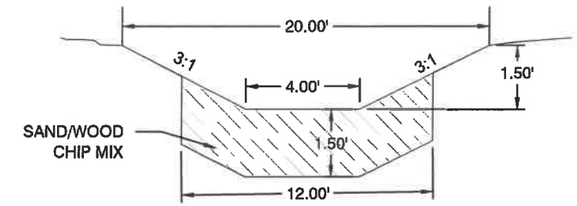

3 SPSC TYPICAL POOL CROSS SECTION
NOT TO SCALE

STANDARD DETAILS - SUDAS

THE FOLLOWING LIST OF DETAILS FROM THE 2018 VERSION OF THE IOWA STATEWIDE URBAN DESIGN AND STANDARD SPECIFICATIONS (SUDAS) ARE APPLICABLE FOR THIS PROJECT.

FIGURE	DATE	TITLE
3010.103	10-18-16	FLEXIBLE GRAVITY PIPE TRENCH BEDDING (SW-103)
4040.231	10-21-14	SUBDRAINS
4040.232	10-18-16	SUBDRAIN CLEANOUTS
4040.233	10-18-16	SUBDRAIN OUTLETS
9040.111	10-21-14	RIP RAP APRON FOR PIPE OUTLET INTO CHANNEL
9040.120	10-21-14	STABILIZED CONSTRUCTION ENTRANCE

PRELIMINARY
NOT FOR CONSTRUCTION

NO.	REVISION	BY	DATE

DESIGNED: PDS
DRAFTED: BAY
CHECKED: LTL
SCALE: NA
PROJECT NO.: 011.013
FILE NUMBER: 011.013
SHEET NO.: C3
DATE: AUGUST 7, 2018

PINEDALE PARK IMPROVEMENTS
SP-003987-2018
WEST DES MOINES, IOWA
TYPICAL DETAILS

LT LEON ASSOCIATES INC
office 515-472-7015
www.ltleon.com
500 EAST LOCUST STREET SUITE 400
DES MOINES IOWA 50309

PROJECT NO. 011.013

TYPICAL DETAILS

SHEET NO.
C3

PLANTING SCHEDULE

KEY	QTY.	BOTANICAL NAME	COMMON NAME	SIZE	CONDITION	MAX HEIGHT & WIDTH	REMARKS
CB	155	Carex bicknellii	White-Tinged Sedge	36 CELL FLAT	PLUG		
IV	104	Iris versicolor	Blue Flag Iris	36 CELL FLAT	PLUG	2'-2.5' x 2'-2.5'	Spring Blooming
HP	104	Helianthus pauciflorus	Showy Sunflower	36 CELL FLAT	PLUG		

Note: All Plant Spacing = 18" ON CENTER SQUARE SPACING

LEGEND

- PROPOSED PCC
- RIPRAP
- COBBLE
- BOULDERS
- COMPOST AND NATIVE SEED MIX
- NATIVE GRASS MIX
- TURF GRASS
- SAND/WOODCHIP MIX
- NATIVE PLUGS

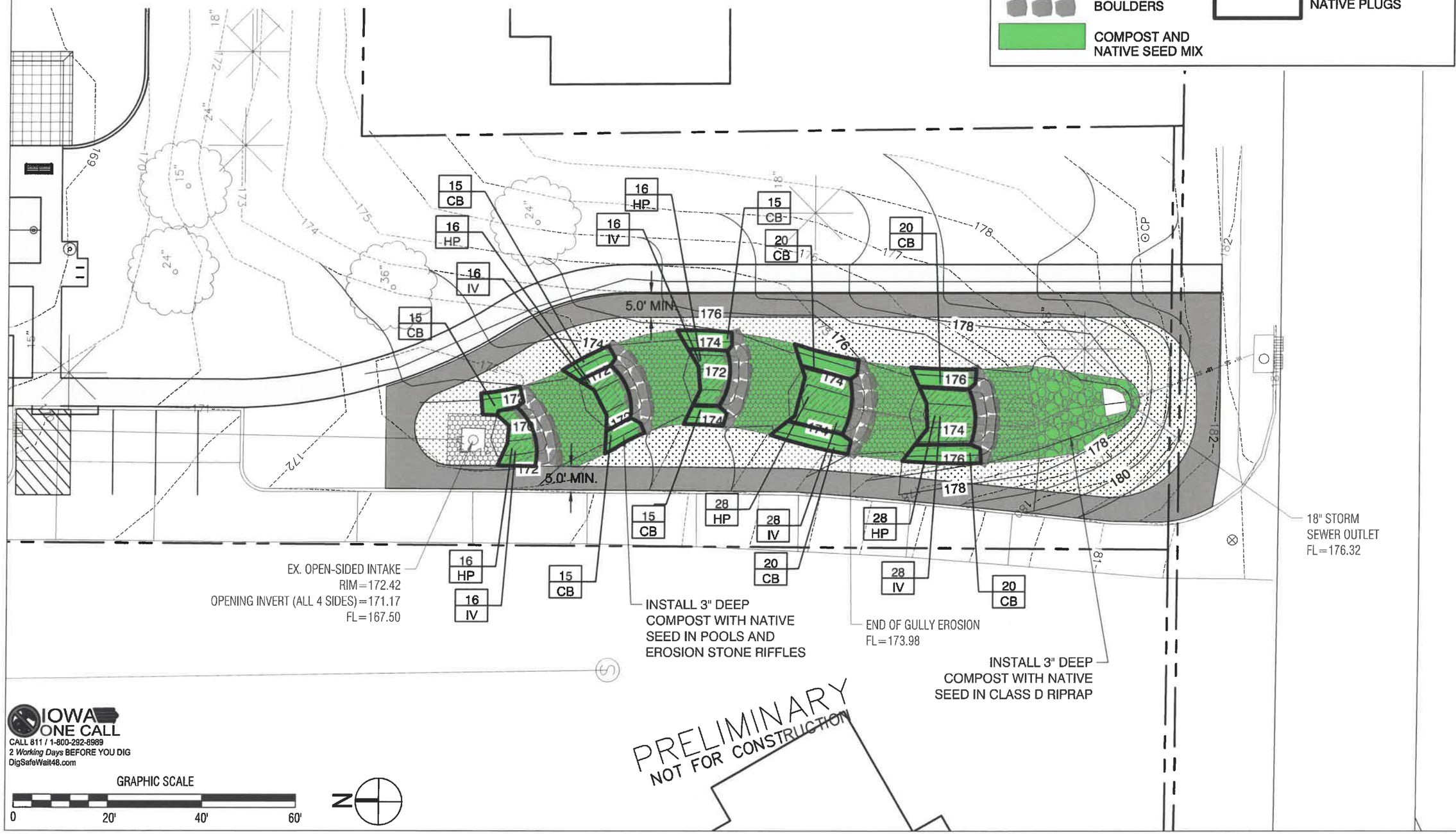

NO.	REVISION	BY	DATE

DESIGNED: PDS
DRAFTED: BAY
CHECKED: LTL
SCALE: 1:20
PROJECT NO.: 011.013
FILE NUMBER: 011.013
SHEET NO.: C4
DATE: AUGUST 7, 2018

PINEDALE PARK IMPROVEMENTS
SP-003987-2018
WEST DES MOINES, IOWA
PLANTING PLAN

LT LEON ASSOCIATES INC
500 EAST LOCUST STREET SUITE 400
DES MOINES IOWA 50309
office 515-422-7016
www.ltleon.com

PROJECT NO. 011.013

PLANTING PLAN

SHEET NO.
C4

EXHIBIT II

Prepared by: J.B. Munford, City of West Des Moines Development Services, P.O. Box 65320, West Des Moines, IA 50265-0320, 515-222-3620
When Recorded, Return to: City Clerk, City of West Des Moines, P. O. Box 65320, West Des Moines, IA 50265-0320

RESOLUTION

A RESOLUTION OF THE CITY COUNCIL OF THE CITY OF WEST DES MOINES, APPROVING THE SITE PLAN (SP-003987-2018) TO ALLOW CONSTRUCTION OF PARK IMPROVEMENTS.

WHEREAS, pursuant to the provisions of Title 9, Chapter 1 et seq, of the West Des Moines Municipal Code, the applicant, The City of West Des Moines, has requested approval for Site Plan (SP-003987-2018) for that site at 3375 Woodland Avenue for the purpose of park improvements;

Legal Description of Property

COMMENCING AT A POINT OF REFERENCE AT THE SW CORNER OF LOT 1 OF SAID WOODLAND PARK PLAZA PLAT 1; THENCE N00°54'46"W, 2.00 FEET ALONG THE WEST LINE OF SAID LOT 1 TO THE POINT OF BEGINNING; THENCE N89°48'22"W, 90.14 FEET TO A POINT; THENCE N00°13'30"E, 340.45 FEET TO A POINT; THENCE N89°03'22"E, 163.29 FEET TO A POINT ON THE WEST LINE OF SAID LOT 4; THENCE S00°56'38"E, 171.05 FEET ALONG SAID WEST LINE TO THE NE CORNER OF SAID LOT 1; THENCE N89°38'32"W, 80.04 FEET ALONG THE NORTH LINE OF SAID LOT 1 TO THE NW CORNER OF SAID LOT 1; THENCE S00°54'46"E, 174.94 FEET ALONG THE WEST LINE OF SAID LOT 1 TO THE POINT OF BEGINNING AND CONTAINING 0.992 ACRES (43,213 SQUARE FEET).

WHEREAS, studies and investigations were made, and staff reports and recommendations were submitted which are made a part of this record and herein incorporated by reference;

WHEREAS, on August 27, 2018, the Plan and Zoning Commission did recommend to the City Council approval of the Site Plan (SP-003987-2018);

WHEREAS, on, September 4, 2018, this City Council held a duly-noticed meeting to consider the application for Site Plan (SP-003987-2018);

NOW, THEREFORE, THE CITY COUNCIL OF THE CITY OF WEST DES MOINES DOES RESOLVE AS FOLLOWS:

SECTION 1. The findings, for approval, stated in the staff report, dated September 4, 2018, or as amended orally at the City Council meeting of September 4, 2018, are adopted.

SECTION 2. Site Plan (SP-003987-2018) to allow construction of park improvements is approved, subject to compliance with all the conditions in the staff report, dated September 4, 2018, including conditions added at the

meeting, and attached hereto as Exhibit "A". Violation of any such conditions shall be grounds for revocation of the entitlement, as well as any other remedy which is available to the City.

PASSED AND ADOPTED on September 4, 2018.

_____
Steven K. Gaer
Mayor

ATTEST:

_____
Ryan T. Jacobson
City Clerk

I HEREBY CERTIFY that the foregoing resolution was duly adopted by the City Council of the City of West Des Moines, Iowa, at a regular meeting held on September 4, 2018, by the following vote:

ATTEST:

_____
Ryan T. Jacobson
City Clerk

EXHIBIT "A"
CONDITIONS OF APPROVAL

1. None