CITY OF WEST DES MOINES
CITY COUNCIL MEETING COMMUNICATION

Date: September 16, 2019

ITEM: Raccoon River Basin 5 Lift Station, 3105 SW Grand Prairie Parkway – Construction of a sanitary sewer lift station – Raccoon River Land Co., LLC – SP-004421-2019

RESOLUTION: Approval of Site Plan

FINANCIAL IMPACT: Undetermined.

BACKGROUND: With permission from the property owner, Raccoon River Land Company, LLC,, the City of West Des Moines Engineering Services is proposing to locate a sanitary sewer lift station south of the Raccoon River on the west side of recently constructed SW Grand Prairie Parkway. The lift station will include a 3,360 square foot building within a fenced area, an access road from the street along with landscaping for screening and buffering purposes.

It should be noted, also on this City Council agenda is a request for approval of a Plat of Survey to create a 0.94 acre parcel for the lift station improvements. The City will obtain ownership of the parcel being created.

Plan and Zoning Commission Action:
Vote: 4-0 approval, with Commissioners Andersen and Crowley absent and Commissioner Costa abstaining.
Date: September 9, 2019
Motion: Adopt a resolution recommending the City Council approve the Site Plan

OUTSTANDING ISSUES: There are no outstanding issues.
The following items of interest are noted in the attached Plan and Zoning Commission report (see Exhibit I):

- Applicant's Request
- History
- City Council Subcommittee - Development & Planning: *August 5, 2019*
- Staff Review and Comments
  - *Plat of Survey*
  - *Access Road Paving*
- Comprehensive Plan Consistency
- Findings
- Staff Recommendation and Conditions of Approval
- Owner/Applicant/Applicant Representative Information

RECOMMENDATION: Based upon the preceding review and a finding of consistency with the goals and policies of the Comprehensive Plan, the Plan and Zoning Commission recommends the City Council approve the Raccoon River Basin 5 Lift Station site plan to allow construction of a sanitary sewer lift station with the associated building and fenced area, subject to the applicant meeting all City Code requirements and the following condition of approval:

1. The applicant paving the access road to the site at the completion of the adjacent trunk sewer project or by December 21, 2021, whichever occurs first.

Lead Staff Member: Brian Portz, AICP BP

Staff Reviews:

Department Director	
Appropriations/Finance	
Legal	
Agenda Acceptance	

PUBLICATION(S) (if applicable)

Published In	not requried	
Date(s) Published	NA	
Letter sent to surrounding property owners		NA

SUBCOMMITTEE REVIEW (if applicable)

Committee	Development & Planning		
Date Reviewed	August 5, 2019		
Recommendation	Yes ☒	No ☐	Split ☐

ATTACHMENTS:

- Exhibit I - Plan and Zoning Commission Communication
  - Attachment A - Commission Resolution
    - Exhibit A Conditions of Approval
  - Attachment B - Location Map
  - Attachment C - Site Plans & Building Elevations
- Exhibit II - City Council Resolution
  - Exhibit A - Conditions of Approval

EXHIBIT I

CITY OF WEST DES MOINES
PLAN AND ZONING COMMISSION COMMUNICATION

Meeting Date: September 9, 2019

Item: Raccoon River Basin 5 Lift Station, 3105 SW Grand Prairie Parkway – Construction of a sanitary sewer lift station – Raccoon River Land Company, LLC – SP-004421-2019

Requested Action: Recommend Approval of Site Plan

Case Advisor: Brian Portz, AICP BP

Applicant's Request: City of West Des Moines Engineering Services, with permission from the property owner, Raccoon River Land Company, LLC, is proposing to locate a sanitary sewer lift station south of the Raccoon River on the west side of the future extension of SW Grand Prairie Parkway. The lift station will include a 3,360 square foot building with a fenced in area and an access road from the street along with landscaping for screening and buffering purposes.

History: The property was brought into the City as a part of the Raccoon River Annexation, which was approved in 2010. The property has never been platted.

City Council Subcommittee: This item was presented to the Development & Planning City Council Subcommittee at their August 5, 2019 meeting, as an informational item only. No discussion was had and no disagreement with the proposal was expressed.

Staff Review and Comment: This request was distributed to other City departments and other agencies for their review and comment. There are no outstanding issues. Staff would summarize the following key points of interest:

- *Plat of Survey:* As a separate item, a Plat of Survey for the acquisition of the property will be reviewed by the City Council on September 16, 2019.

- *Access Road Paving:* Temporarily, the access road to the lift station will be gravel. City Code requires that the access road be paved. City Engineering Services staff has indicated that the road will be paved at the completion of the adjacent trunk sewer project or by December 21, 2021, whichever occurs first. Staff recommends a condition of approval requiring the paving of the access road by the date specified above.

Comprehensive Plan Consistency: The project has been reviewed for consistency with the Comprehensive Plan. Based upon that review, a finding has been made that the proposed project is consistent with the Comprehensive Plan in that the project is consistent with all of the goals and policies of the Comprehensive Plan and the land use map of the Comprehensive Plan.

Findings: This proposed project was distributed to various city departments for review and comment. Based upon that review, the following findings have been made on the proposed project:

1. The proposed development and use is consistent with the West Des Moines Comprehensive Plan in that the project has been reviewed for consistency with the Comprehensive Plan. Based upon that review, a finding has been made that the proposed project is consistent with the Comprehensive Plan in that the project is consistent with all of the goals and policies of the Comprehensive Plan.

2. The proposed development and use does assure compatibility of property uses within the zone and general area in that this project was reviewed by various City Departments for compliance with the Zoning Ordinance.

3. All applicable standards and conditions have been imposed which protects the public health, safety and welfare in that this project was reviewed by various City Departments and public agencies for compliance with the various state and local regulations. Based upon that review a finding is made that the project has been adequately conditioned to protect the health, welfare and safety of the community.

4. There is adequate on-site and off-site public infrastructure to support the proposed development in that this project was reviewed by various public agencies and City Departments and public utilities to ensure that either the petitioner will construct or the project has been conditioned to construct adequate public infrastructure to serve the development.

5. The proposed development and use has met the requirements contained in the City Code in that this project was reviewed by various City Departments and the project has complied with or has been conditioned to comply with all City Code requirements.

6. The proposed development and use is in keeping with the scale and nature of the surrounding neighborhood in that the proposed project is consistent with the zoning designation and Comprehensive Plan which designates this site as suitable for development such as that proposed by this project.

Staff Recommendation and Conditions of Approval: Based upon the preceding review and a finding of consistency with the goals and policies of the Comprehensive Plan, staff recommends the Plan and Zoning Commission adopt a resolution recommending the City Council approve the Raccoon River Basin 5 Lift Station site plan to allow construction of a sanitary sewer lift station with the associated building and fenced area, subject to the applicant meeting all City Code requirements and the following:

1. The applicant paving the access road to the site at the completion of the adjacent trunk sewer project or by December 21, 2021, whichever occurs first.

Property Owner: Raccoon River Land Co., LLC
5000 Westown Parkway, Suite 400
West Des Moines, IA 50266

Applicant: City of West Des Moines
4200 Mills Civic Parkway
West Des Moines, IA 50265
Jason.schlickbernd@wdm.iowa.gov

Applicant's Representatives:
Veenstra & Kimm, Inc.
3000 Westown Parkway
West Des Moines, IA 50266
bveenstra@v-k.net

ATTACHMENTS:

Attachment A	-	Plan and Zoning Commission Resolution
Exhibit A		- Conditions of Approval
Attachment B	-	Location Map
Attachment C	-	Site Plans & Building Elevations

ATTACHMENT A

RESOLUTION NO. PZC-19-061

A RESOLUTION OF THE PLAN AND ZONING COMMISSION OF THE CITY OF WEST DES MOINES, IOWA, RECOMMENDING TO THE CITY COUNCIL THAT IT APPROVE THE RACCOON RIVER BASIN 5 LIFT STATION (SP-004421-2019) FOR THAT PROPERTY LOCATED AT 3105 SW GRAND PRAIRIE PARKWAY

WHEREAS, pursuant to the provisions of Title 9, Chapter 1 et seq, of the West Des Moines Municipal Code, the applicant, The City of West Des Moines, in association with the property owner, Raccoon River Land Company, LLC, has requested approval of a the Raccoon River Basin 5 Lift Station to allow the construction of a sanitary sewer lift station for that property located at 3105 SW Grand Prairie Parkway;

WHEREAS, studies and investigations were made, and staff reports and recommendations were submitted which is made a part of this record and herein incorporated by reference;

WHEREAS, on September 9, 2019, this Commission held a duly-noticed meeting to consider the Raccoon River Basin 5 Lift Station Site Plan (SP-004421-2019);

NOW, THEREFORE, THE PLAN AND ZONING COMMISSION OF THE CITY OF WEST DES MOINES DOES RESOLVE AS FOLLOWS:

SECTION 1. The findings, for approval, in the staff report, dated September 9, 2019, or as amended orally at the Plan and Zoning Commission meeting of September 9, 2019, are adopted.

SECTION 2. SITE PLAN PERMIT (SP-004421-2019) to allow construction of a sanitary sewer lift station is recommended to the City Council for approval, subject to compliance with all the conditions in the staff report, dated September 9, 2019, including conditions added at the meeting, and attached hereto as Exhibit "A". Violation of any such conditions shall be grounds for revocation of the permit, as well as any other remedy which is available to the City.

PASSED AND ADOPTED on September 9, 2019.

Jill Southworth, Vice-Chair
Plan and Zoning Commission

ATTEST:

Recording Secretary

I HEREBY CERTIFY that the foregoing resolution was duly adopted by the Plan and Zoning Commission of the City of West Des Moines, Iowa, at a regular meeting held on September 9, 2019, by the following vote:

AYES: Drake, Erickson, Hatfield, Southworth
NAYS:
ABSTENTIONS: Costa
ABSENT: Andersen, Crowley

ATTEST:

Recording Secretary

Exhibit A

Conditions of Approval

1. The applicant paving the access road to the site at the completion of the adjacent trunk sewer project or by December 21, 2021, whichever occurs first.

Location Map

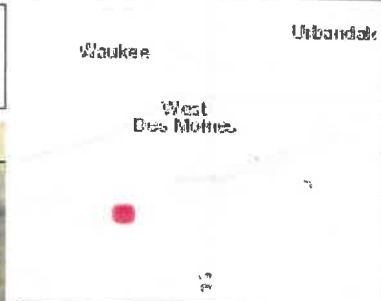

Legend

- Addresses
- Corporate Limits
- Parcels

929.2 0 464.59 929.2 Feet

WGS_1984_Web_Mercator_Auxiliary_Sphere

© City of West Des Moines, Iowa

Disclaimer: The City of West Des Moines makes no warranties regarding the accuracy or completeness of the data provided herein.

THIS MAP IS NOT TO BE USED FOR NAVIGATION

ATTACHMENT B

P:\102217\MODEL GRAVITY SEWER AT LIFT STATION\CIVIL\102217 SITE PLAN APPLICATION.dwg

PLOTTED: Sep 5, 2019 14:52:57 Thu

SITE PLANS FOR RACCOON RIVER BASIN 5 SEWER LIFT STATION WEST DES MOINES, IOWA

WEST DES MOINES PROJECT NO. SP - 004421 - 2019

THE CITY OF West Des Moines.

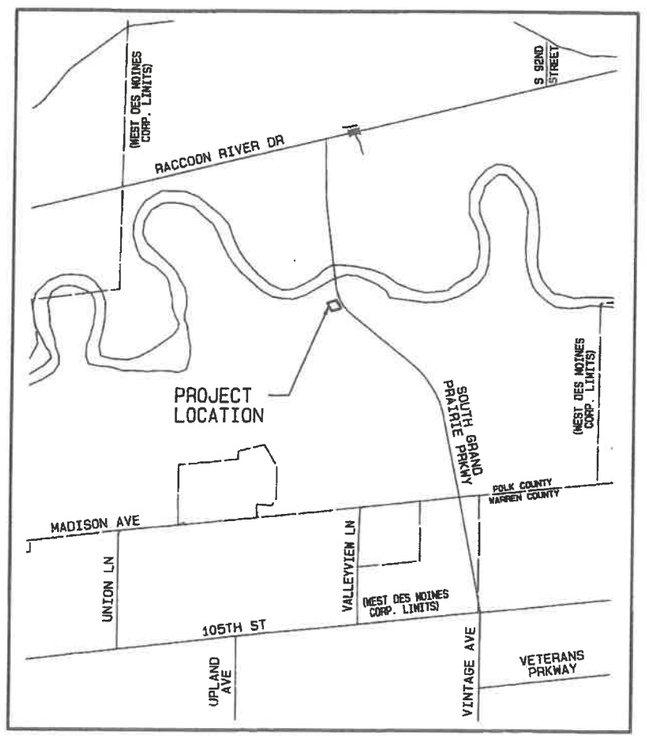

VICINITY MAP

NOT TO SCALE

DRAWING INDEX

NO.	DRAWING TITLE
1	INDEX AND TITLE SHEET
2	GENERAL NOTES AND LEGEND
3	REFERENCE TIES AND BENCHMARKS
4	REFERENCE TIES AND BENCHMARKS
5	PLAN AND PROFILE
6	SITE PLAN
7	LIFT STATION LAYOUT PLAN
8	LIFT STATION SPOT ELEVATIONS
9	LIFT STATION JOINTING PLAN
10	ACCESS DRIVE
11	LIFT STATION
12	SITE PLAN - LANDSCAPING
13	EROSION CONTROL PLAN

1. ALL CONSTRUCTION WITHIN PUBLIC R.O.W./EASEMENTS, AND/OR ANY CONNECTION TO SEWERS AND STREETS, SHALL COMPLY WITH THE WEST DES MOINES STANDARD CONSTRUCTION SPECIFICATIONS FOR SUBDIVISIONS, DSM METRO DESIGN STANDARDS AND WDM ADDENDUMS.
2. AT LEAST ONE WEEK PRIOR TO ANY CONSTRUCTION WITHIN PUBLIC R.O.W./EASEMENTS AND/OR ANY CONNECTION TO SEWERS AND STREETS, THE CONTRACTOR SHALL CONTACT THE WDM ENGINEERING SERVICES 222-3475 TO SCHEDULE ANY REQUIRED INSPECTIONS. IT IS IMPORTANT TO NOTE CITY APPROVAL OF THE PLAN IS SUBJECT TO THE APPLICANT OBTAINING ALL NECESSARY EASEMENTS/AGREEMENTS AND APPLICABLE PERMITS.

ENGINEER

H. ROBERT VEENSTRA, JR.
VEENSTRA & KIMM, INC.
3000 WESTOWN PARKWAY
WEST DES MOINES, IA 50266-1320

PROPERTY OWNER/DEVELOPER

CITY OF WEST DES MOINES
C/O JASON SCHLICKBERND
4200 MILLS CIVIC PARKWAY
PO BOX 65320
WEST DES MOINES, IA 50265

COMPREHENSIVE PLAN

LAND USE: OPEN SPACE/SINGLE FAMILY RESIDENCE

ZONING

UNZONED
BUILDING SETBACKS:
FRONT: 35'
REAR AND SIDES: 20'
LOT SIZE: NO MINIMUM

IMPERVIOUS AREA

UNDEVELOPED SITE: 40,904 SF 0% IMPERVIOUS
DEVELOPED SITE: 6,069 SF 14.8% IMPERVIOUS
NET UNDEVELOPED SITE: 34,835 SF 85.2%

BUILDING AREA

12'X 28' = 3,360 SF

IOWA ONE CALL
1-800-292-8989
www.iowaonecall.com
811

I HEREBY CERTIFY THAT THIS ENGINEERING DOCUMENT WAS PREPARED BY ME OR UNDER MY DIRECT PERSONAL SUPERVISION AND THAT I AM A DULY LICENSED PROFESSIONAL ENGINEER UNDER THE LAWS OF THE STATE OF IOWA.

SIGNATURE: [signature]
NAME: H. ROBERT VEENSTRA JR.
DATE: September 5, 2019
MY LICENSE RENEWAL DATE IS DECEMBER 31, 2020
PAGES COVERED BY THIS SEAL:

LICENSED PROFESSIONAL ENGINEER
H. ROBERT VEENSTRA, JR.
9037
IOWA

CONTROL POINT	COORDINATES	BENCHMARK	ELEVATION

DATE	REVISIONS

SCALE	NONE
DRAWN	DLL
CHECKED	HRV
APPROVED	HRV
DATE	9-5-19
A.C.	

V&K
VEENSTRA & KIMM, INC.
3000 Westown Parkway • West Des Moines, Iowa 50266-1320
515-225-8000 • 515-225-7848 (FAX) • 800-241-8000 (WATS)

INDEX AND TITLE SHEET

DWG. NO. 1

PROJECT 102217

P:\102217\MODEL GRAVITY SEWER AT LIFT STATION\CIVIL\102217 SITE PLAN APPLICATION.pro

PLOTTED: Sep 5, 2019 13:46:15 Thu

GENERAL LEGEND

	SURVEY LINE & STATION INDICATOR	12"CMP	CULVERT; SIZE AND TYPE
	CONCRETE SURFACE	OR	FLARED END SECTION
	ASPHALT SURFACE		RAILROAD
	CONCRETE SURFACE W/ASPHALT OVERLAY		MAILBOX
	LOW GRADE ASPHALT SURFACE		FENCE (ALL OTHER)
	GRANULAR SURFACE		SECURITY FENCE
	DIRT SURFACE		WOOD FENCE
	BRICK SURFACE		PROPERTY LINE
	SURFACING REMOVAL/REPLACEMENT		PROPERTY PIN
	EARTH SECTION		SECTION CORNER
	NEW SEWER/MANHOLE		PLAT BOUNDARY
	NEW SEWER/INTAKE		BUILDING
	NEW WATER MAIN	855.55	ELEVATION MARKER
	NEW FORCE MAIN		CENTERLINE
	NEW HYDRANT	DIA.	DIAMETER
	NEW WATER VALVE	ELEV.	ELEVATION
8"S	EXISTING SANITARY SEWER AND SIZE	PVC	POLYVINYLCHLORIDE PIPE
18"SS	EXISTING STORM SEWER AND SIZE	CI	CAST IRON PIPE
8"W	EXISTING WATER MAIN AND SIZE	DI	DUCTILE IRON PIPE
6"FM	EXISTING FORCE MAIN AND SIZE	CMP	CORRUGATED METAL PIPE
4"G	GAS MAIN AND SIZE	VCP	VITRIFIED CLAY PIPE
UE	UNDERGROUND POWER LINE	RCP	REINFORCED CONCRETE PIPE
OP	OVERHEAD POWER LINE	RCAP	REINFORCED CONCRETE ARCH PIPE
T	UNDERGROUND TELEPHONE LINE	LRCP	LINED REINFORCED CONCRETE PIPE
CTV	CABLE TELEVISION LINE	LCPP	LINED CONCRETE PRESSURE PIPE
FO	FIBER OPTICS	STA.	STATION
	TOP OF EMBANKMENT	LA	LINE AHEAD
	TOE OF EMBANKMENT	LB	LINE BACK
	DRAINAGE COURSE	BM-2	BENCH MARK AND NUMBER
	MANHOLE	ROW	RIGHT-OF-WAY
OR	CURB INTAKE	PI	POINT OF INTERSECTION
OR	AREA OR BEEHIVE INTAKE	POT	POINT ON TANGENT
	EXISTING HYDRANT	LF	LINEAR FEET
	EXISTING WATER VALVE	TH	TACKED HUB
	GAS VALVE	SB-2	SOIL BORING AND NUMBER
	POWER POLE	PVC	POINT OF VERTICAL CURVATURE
	TELEPHONE POLE	PVT	POINT OF VERTICAL TANGENCY
	STREET LIGHT	VC	VERTICAL CURVE
	POLE W/GUY ANCHOR	PC	POINT OF CURVATURE
	TRAFFIC SIGNALS	PT	POINT OF TANGENCY
	SIGN	MO	MIDDLE ORDINATE
	TELEPHONE CABLE JUNCTION BOX	DWG.	DRAWING
	PEDESTRIAN CONTROL LIGHT	CP-1	CONTROL POINT AND NUMBER
	RAILROAD CONTROL LIGHT	(TYP.)	TYPICAL
	RAILROAD SIGN	HPG	HIGH PRESSURE GAS
	UTILITY ACCESS COVER	IPG	INTERMEDIATE PRESSURE GAS
	PARKING METER	INV.	INVERT
16"	TREE AND SIZE	E.W., E.F.	EACH WAY, EACH FACE
2"	EVERGREEN AND SIZE	E.W.	EACH WAY
18"	STUMP AND SIZE	@	AT
OR	BUSH, SHRUB OR HEDGE	3	DRAWING NUMBER

NOTE: THIS IS A GENERAL LEGEND. ITEMS MAY OR MAY NOT APPEAR ON DRAWINGS.

LEGAL DESCRIPTION

A tract of land located in the Northeast 1/4 of the Northeast 1/4 of Section 33, Township 78 North, Range 26 West of the 5th P.M., Dallas County, Iowa. Said tract being more particularly described as follows:

Commencing at the Southeast corner of the Northeast 1/4 of the Northeast 1/4 of said Section 33; thence North 00°06'32" West (all bearings referenced to Grid North Iowa Regional Coordinate System Zone 8), 10.27 feet along the East line of said Northeast 1/4 of the Northeast 1/4 to the Westerly right-of-way line of SW Grand Prairie Parkway as shown on the Acquisition Plats thereof recorded in Book 2017 on Page 8269 in the Dallas County Recorder s Office; thence North 50°10'56" West, 263.51 feet along said Westerly right-of-way line to the beginning of a tangent curve concave Northeasterly and having a radius of 1182.50 feet; thence Northwesterly along said right-of way line and along said curve through a central angle of 16°02'27" an arc distance of 331.06 feet, said curve having a chord which bears North 42°09'42" West, 329.98 feet to the point of beginning; thence continuing along said right-of way line and along said curve through a central angle of 09°56'55" an arc distance of 205.32 feet, said curve having a chord which bears North 29°10'02" West, 205.06 feet; thence on a non-tangent line South 73°35'34" West, 201.59 feet to the beginning of a non-tangent curve concave Northeasterly and having a radius of 1382.50 feet; thence Southeasterly along said curve through a central angle of 08°26'53" an arc distance of 203.84 feet, said curve having a chord which bears South 27°17'06" East, 203.66 feet; thence on a non-tangent line North 73°35'34" East, 208.45 feet to the point of beginning.

Containing 40,904 square feet, more or less.

GENERAL NOTES

1. ALL ELEVATIONS ARE TO WEST DES MOINES DATUM.
2. WEST DES MOINES PUBLIC SERVICES TO REMOVE AND REPLACE ALL STREET SIGNS.
3. SHAPE ALL DITCHES TO DRAIN AFTER CONSTRUCTION.
4. CONFIRM LOCATION AND DEPTH OF ALL EXISTING UNDERGROUND UTILITIES AS REQUIRED TO ELIMINATE CONFLICTS PRIOR TO CONSTRUCTION. ALLOW UTILITY PERSONNEL TO RELOCATE UTILITIES WHERE CONFLICTS OCCUR.
5. DO NOT INTERRUPT EXISTING UTILITIES OR INDIVIDUAL SERVICES UNLESS DIRECTED BY ENGINEER.
6. LOCATIONS OF CONSTRUCTION LIMIT LINES SHOWN ON PLANS ARE APPROXIMATE. CONFINE ALL CONSTRUCTION OPERATIONS, INCLUDING ACCESS TO WORK, TO CONSTRUCTION LIMITS.
7. SET MANHOLE COVERS FLUSH WITH PROPOSED GRADES UNLESS OTHERWISE NOTED.
8. STATIONING IS ALONG CENTER LINE OF SEWER, UNLESS OTHERWISE NOTED.
9. PROTECT UTILITY POLES, LINES AND APPURTENANCES NOT SHOWN FOR RELOCATION.
10. RESET ALL PROPERTY PINS DISTURBED BY CONSTRUCTION; PINS RESET BY REGISTERED LAND SURVEYOR; COST IS INCIDENTAL TO CONSTRUCTION.
11. PROTECT ALL SURFACING, NOT INDICATED BY SHADING FOR REMOVAL AND REPLACEMENT FROM DAMAGE DURING CONSTRUCTION.

PROTECTION OF VEGETATION

TREES AND OTHER VEGETATION WHICH MAY BE REMOVED ARE MARKED WITH AN "X" OVER THE APPROPRIATE SYMBOL. FOR EXAMPLE ⊠ 12" INDICATES THE REMOVAL OF A 12" TREE. REPLACEMENT, BY CONTRACTOR, OF THESE ITEMS IS NOT REQUIRED.

TUNNEL, INSTALL TIGHT SHEETING, HAND EXCAVATE OR EMPLOY OTHER MEANS APPROVED BY ENGINEER TO PROTECT EXPOSED PORTIONS AND ROOT SYSTEMS OF TREES AND OTHER VEGETATION NOT SCHEDULED FOR REMOVAL. IF TREES AND OTHER VEGETATION NOT SCHEDULED FOR REMOVAL ARE DAMAGED DURING CONSTRUCTION, REPLACE IN KIND AND SIZE AT NO COST TO CITY OR PROPERTY OWNER.

SITE ADDRESS

3105 SW GRAND PRAIRIE PARKWAY
WEST DES MOINES, IOWA

CONTROL POINT	COORDINATES	BENCHMARK	ELEVATION	DATE	REVISIONS

SCALE	NONE
DRAWN	DLL
CHECKED	HRV
APPROVED	HRV
DATE	9-6-19
A.C.	

V&K
VEENSTRA & KIMM, INC.
3000 Westown Parkway • West Des Moines, Iowa 50266-1320
515-225-8000 • 515-225-7848 (FAX) • 800-241-8000 (WATS)

GENERAL NOTES AND LEGEND

DWG. NO. 2

PROJECT 102217

City of West Des Moines, Iowa
Vertical Control Network

Benchmark: 084

NAVD88 - FEET	841.07
WDM DATUM - FEET	67.06
NAVD88 - METERS	256.359
NAD83 NORTHING	558438.3
NAD83 EASTING	1549116.9
SECTION	27
TOWNSHIP	T78N
RANGE	R26W
COUNTY	Dallas

LOCATION

9100 Block of Raccoon River Drive, intersection of Raccoon River Drive and S. 92nd Street, 3 feet North of South fence, 25 feet West of fence corner, Sta 1134 ± stamped in PCC pavement on the South side.

DESCRIPTION

Standard Benchmark.

NOTE

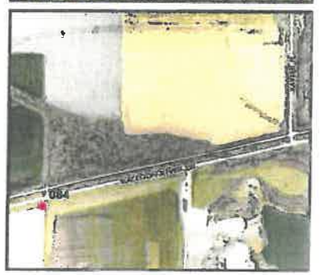

City of West Des Moines, Iowa
Vertical Control Network

Benchmark: 130

NAVD88 - FEET	873.86
WDM DATUM - FEET	99.85
NAVD88 - METERS	266.353
SECTION	20
TOWNSHIP	T78N
RANGE	R26W
COUNTY	Dallas

LOCATION

Southwest corner of Booneville Road and "V" Place. 3 feet North of South Right of Way fence on Booneville Road and in line with East edge of "V" Place. West side of field entrance.

DESCRIPTION

Standard Benchmark.

NOTE

City of West Des Moines, Iowa
Vertical Control Network

Benchmark: USGS E

NAVD88 - FEET	845.50
WDM DATUM - FEET	71.49
NAVD88 - METERS	257.709
SECTION	28
TOWNSHIP	T78N
RANGE	R26W
COUNTY	Dallas

LOCATION

U.S.G.S. Tablet #845 - Southwest concrete headwall of railroad bridge #370.9 over creek on the North side of Raccoon River Drive, 300+/- West of East line of Section 28, Township 78 North, Range 26 West.

DESCRIPTION

Stamped elevation 845.208 feet;

NOTE

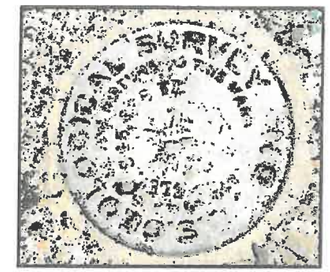

CONTROL POINTS - BENCHMARKS

		COORDINATES
CP-100:	CUT 'X' TOP OF WEST CURB OF GRAND PRAIRIE PKWY 100'± SOUTH OF DRIVE. STA.7+30.68, 103.90' LT. EL=67.46.	N=553709.85 E=1544825.00
CP-101:	CUT 'X' TOP OF WEST CURB OF GRAND PRAIRIE PKWY 100'± NORTH OF DRIVE. STA.7+77.88, 102.69' RT. EL=78.68.	N=553901.28 E=1544734.09
CP-102:	SET 1/2"REBAR 225'± NW OF BM-1.200'± SOUTH OF RIVER BANK. STA.7+77.88, 102.69' RT. EL=78.68.	N=553901.28 E=1544734.09

CONTROL POINT	COORDINATES	BENCHMARK	ELEVATION

DATE	REVISIONS

SCALE	NONE
DRAWN	DLL
CHECKED	HRV
APPROVED	HRV
DATE	9-5-19
A.C.	

V&K
VEENSTRA & KIMM, INC.
3000 Westown Parkway • West Des Moines, Iowa 50266-1320
515-225-8000 • 515-225-7848 (FAX) • 800-241-8000 (WATS)

REFERENCE TIES AND BENCHMARKS

DWG. NO. 3

PROJECT 102217

P:\102217\MODEL GRAVITY SEWER AT LIFT STATION\CIVIL\102217 SITE PLAN APPLICATION.DWG
PLOTTED: Sep 5, 2019 13:46:26 Thu

2014 City of West Des Moines, Iowa
Horizontal Datum: **NAD 83(2011)** - Vertical Datum: **NAVD 1988**
Iowa South Zone (1402)
Iowa Regional Coordinate System Zone 8 Ames-Des Moines
US Survey Feet

Point Name: **USGS E** Network Point ID: **117**

NAD 83(2011) Latitude: **N41°31'47.97198"** Longitude: **W93°50'55.36516"**

NAVD 88 Ortho Height: **845.500**sft Ellip. Ht: **743.983**sft **Geoid12A**

Mapping Angle: **-0°13'47"** Combination Scale Factor: **0.999929333**

Iowa South Zone (1402) Northing: **557623.979**sft Easting: **1544939.094**sft

IaRCS Zone 8 Northing: **7466398.465**sft Easting: **18463843.244**sft

Designation: NGS 1st order vertical control station "845" PID: MH0427

Monument Type: A USGS survey disk stamped "ELEV 845.208" and set in the south end of the west abutment of railroad bridge 370.8.

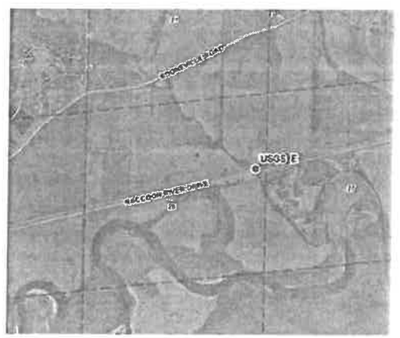

This document was prepared by DCI on June 13, 2014 for use by The City of West Des Moines, Iowa

2014 City of West Des Moines, Iowa
Horizontal Datum: **NAD 83(2011)** - Vertical Datum: **NAVD 1988**
Iowa South Zone (1402)
Iowa Regional Coordinate System Zone 8 Ames-Des Moines
US Survey Feet

Point Name: **G101** Network Point ID: **201**

NAD 83(2011) Latitude: **N41°30'26.73470"** Longitude: **W93°50'47.60153"**

NAVD 88 Ortho Height: **994.340**sft Ellip. Ht: **892.741**sft **Geoid12A**

Mapping Angle: **-0°13'42"** Combination Scale Factor: **0.999920054**

Iowa South Zone (1402) Northing: **549399.364**sft Easting: **1545496.799**sft

IaRCS Zone 8 Northing: **7458174.677**sft Easting: **18464421.396**sft

Designation: Dallas Co. GPS Control Monument G101 (set by WHKS in 2002)

Monument Type: 5/8" x 6'-0" long aluminum rod with stamped cap and NGS style access cover.

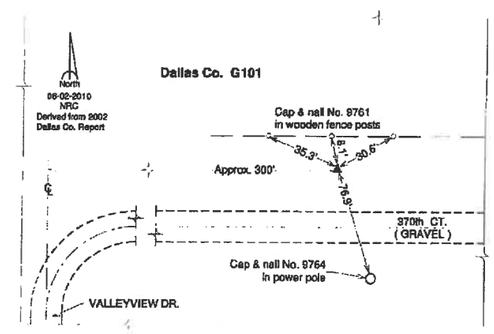

This document was prepared by DCI on June 13, 2014 for use by The City of West Des Moines, Iowa

2014 City of West Des Moines, Iowa
Horizontal Datum: **NAD 83(2011)** - Vertical Datum: **NAVD 1988**
Iowa South Zone (1402)
Iowa Regional Coordinate System Zone 8 Ames-Des Moines
US Survey Feet

Point Name: **WDM-HZ #14** Network Point ID: **2014**

NAD 83(2011) Latitude: **N41°31'35.29892"** Longitude: **W93°51'55.76938"**

NAVD 88 Ortho Height: **852.930**sft Ellip. Ht: **751.511**sft **Geoid12A**

Mapping Angle: **-0°14'27"** Combination Scale Factor: **0.999928623**

Iowa South Zone (1402) Northing: **556360.162**sft Easting: **1540339.650**sft

IaRCS Zone 8 Northing: **7465123.154**sft Easting: **18459246.627**sft

Designation: West Des Moines GPS Control Pt. - WDM-HZ #14

Monument Type: 3/4" x 9'-0" long Berntsen Top Security Rod monument with a 2-1/2" dia. domed survey cap and permanent magnet encased in a white PVC pipe with a NGS style alum. access cover.

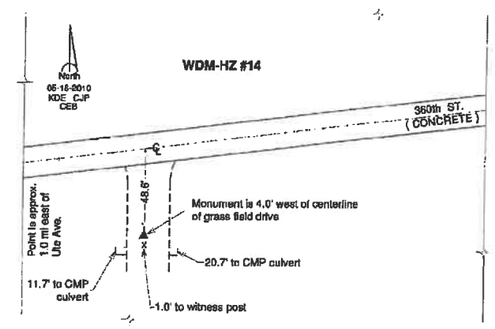

This document was prepared by DCI on June 13, 2014 for use by The City of West Des Moines, Iowa

P:\102217\TMODEL GRAVITY SEWER AT LIFT STATION\CIVIL\102217 SITE PLAN APPLICATION.pro

PLOTTED: Sep 5,2019 13:46:31 Thu

CONTROL POINT	COORDINATES	BENCHMARK	ELEVATION	DATE	REVISIONS

SCALE	NONE
DRAWN	DLL
CHECKED	HRV
APPROVED	HRV
DATE	9-5-19
A.C.	

V&K

VEENSTRA & KIMM, INC.

3000 Westown Parkway • West Des Moines, Iowa 50266-1320
515-225-8000 • 515-225-7848 (FAX) • 800-241-8000 (WATS)

REFERENCE TIES AND BENCHMARKS

DWG. NO. 4

PROJECT 102217

P:\102217\MODEL GRAVITY SEWER AT LIFT STATION\CIVIL\102217 SITE PLAN APPLICATION.dwg

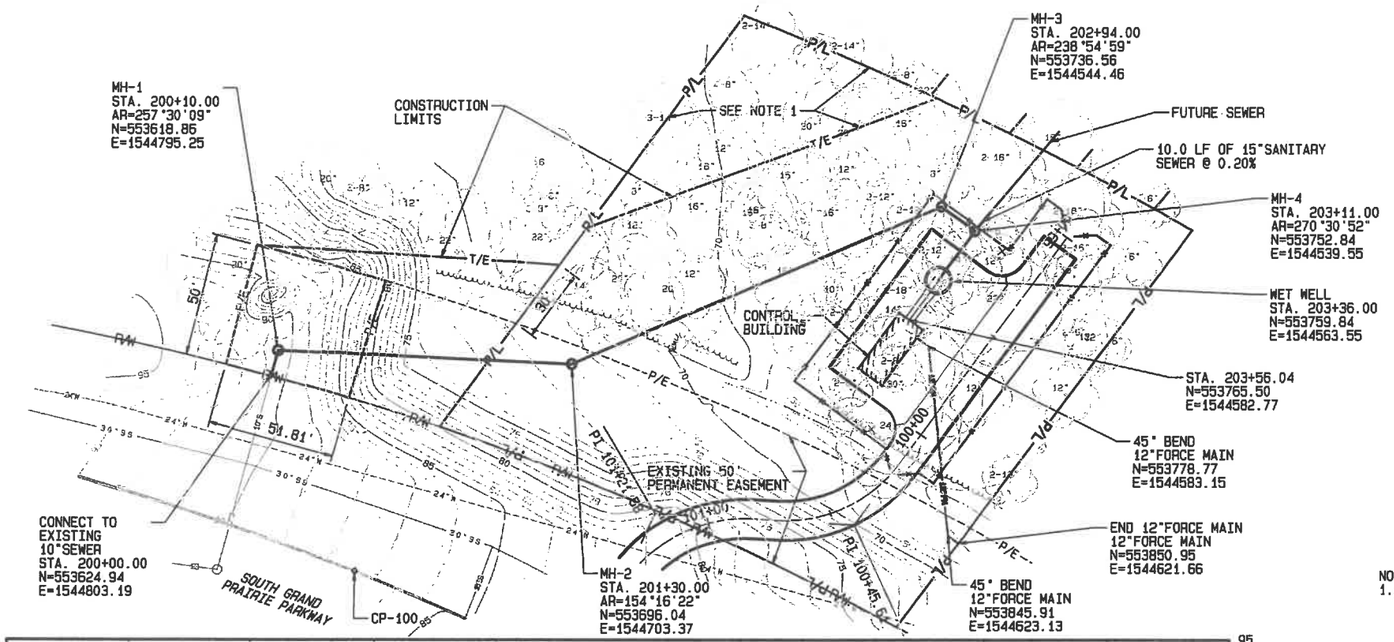

NOTES
1.ALL TREES TO BE REMOVED ON THE PROPERTY EXCLUDING THE TRIANGULAR SHAPED AREA IN THE SW CORNER OF THE PROPERTY.

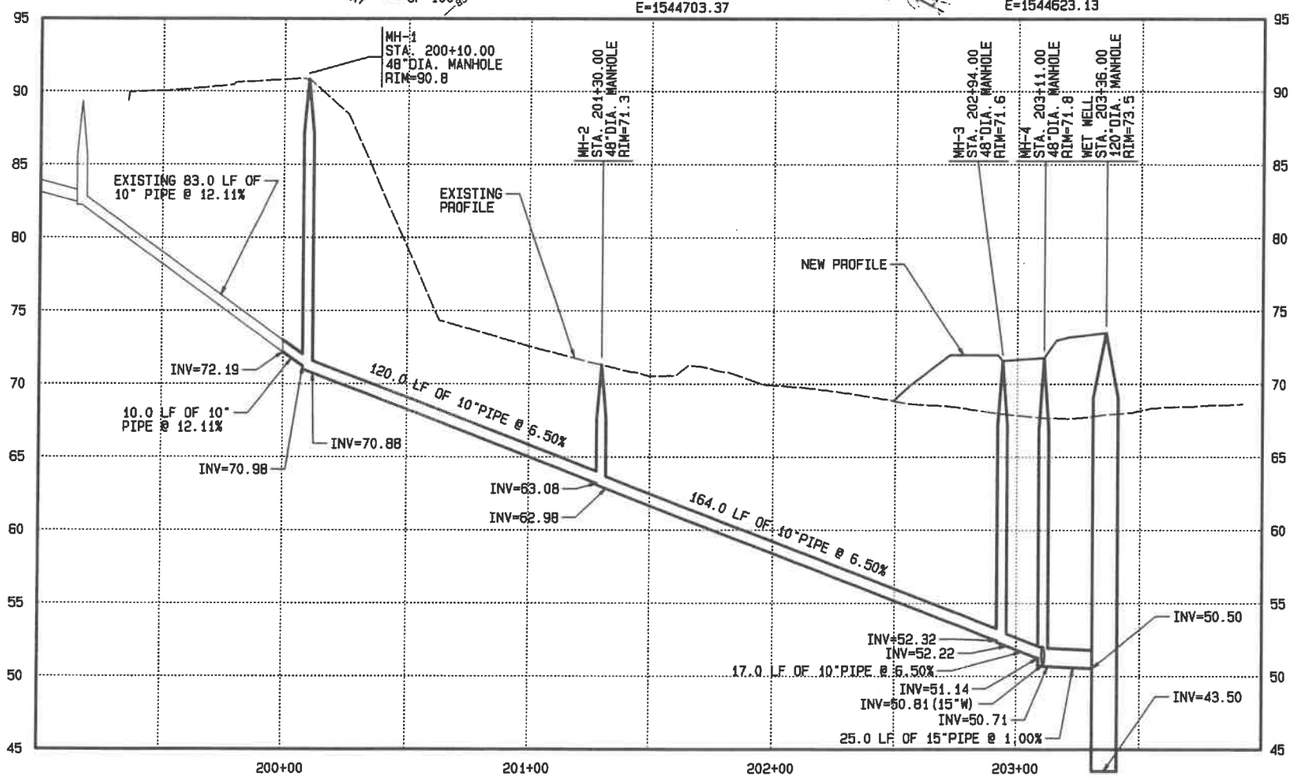

PLOTTED: Sep 5, 2019 14:45:41 Thu

CONTROL POINT	COORDINATES	BENCHMARK	ELEVATION	DATE	REVISIONS

SCALE	AS NOTED
DRAWN	DLL
CHECKED	HRV
APPROVED	HRV
DATE	9-5-19
A.C.	

V&K
VEENSTRA & KIMM, INC.
3000 Westown Parkway • West Des Moines, Iowa 50266-1320
515-225-8000 • 515-225-7848 (FAX) • 800-241-8000 (WATS)

PLAN AND PROFILE

DWG. NO. 5

PROJECT 102217

P:\102217\MODEL GRAVITY SEWER AT LIFT STATION\CIVIL\102217 SITE PLAN APPLICATION.DFO

PLOTTED: Sep 5, 2019 14:41:35 Thu

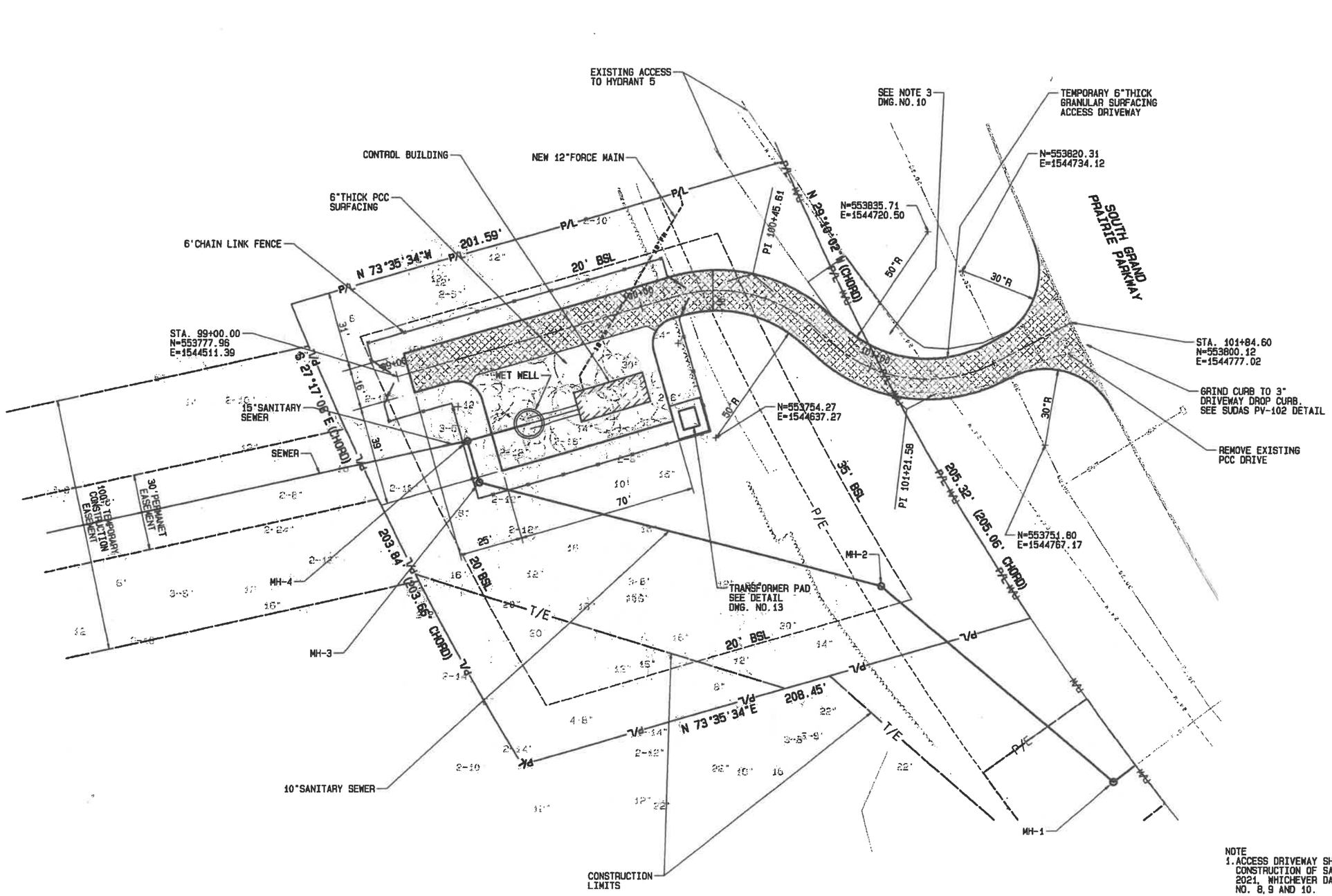

CURVE DATA

PI	101+21.58
Δ=	68°39'46"
North	553765.90
East	1544712.83
A=	69.51
R=	58.00
T=	39.61
LC=	65.42

PI	100+45.61
Δ=	56°51'44"
North	553818.74
East	1544651.17
A=	57.56
R=	58.00
T=	31.40
LC=	55.23

NOTE
1. ACCESS DRIVEWAY SHALL BE PAVED UPON COMPLETION OF CONSTRUCTION OF SANITARY SEWER, OR BY DECEMBER 21, 2021, WHICHEVER DATE OCCURS FIRST. REFER TO DWG. NO. 8, 9 AND 10.

CONTROL POINT	COORDINATES	BENCHMARK	ELEVATION

DATE	REVISIONS

SCALE	AS NOTED
DRAWN	DLL
CHECKED	HRV
APPROVED	HRV
DATE	9-5-19
A.C.	

VEENSTRA & KIMM, INC.
3000 Westown Parkway • West Des Moines, Iowa 50266-1320
515-225-8000 • 515-225-7848 (FAX) • 800-241-8000 (WATS)

SITE PLAN

DWG. NO. 6

PROJECT 102217

P:\102217\TMODEL GRAVITY SEWER AT LIFT STATION\CIVIL\102217 SITE PLAN APPLICATION.DPO

PLOTTED: Sep 5, 2019 14:41:54 Thu

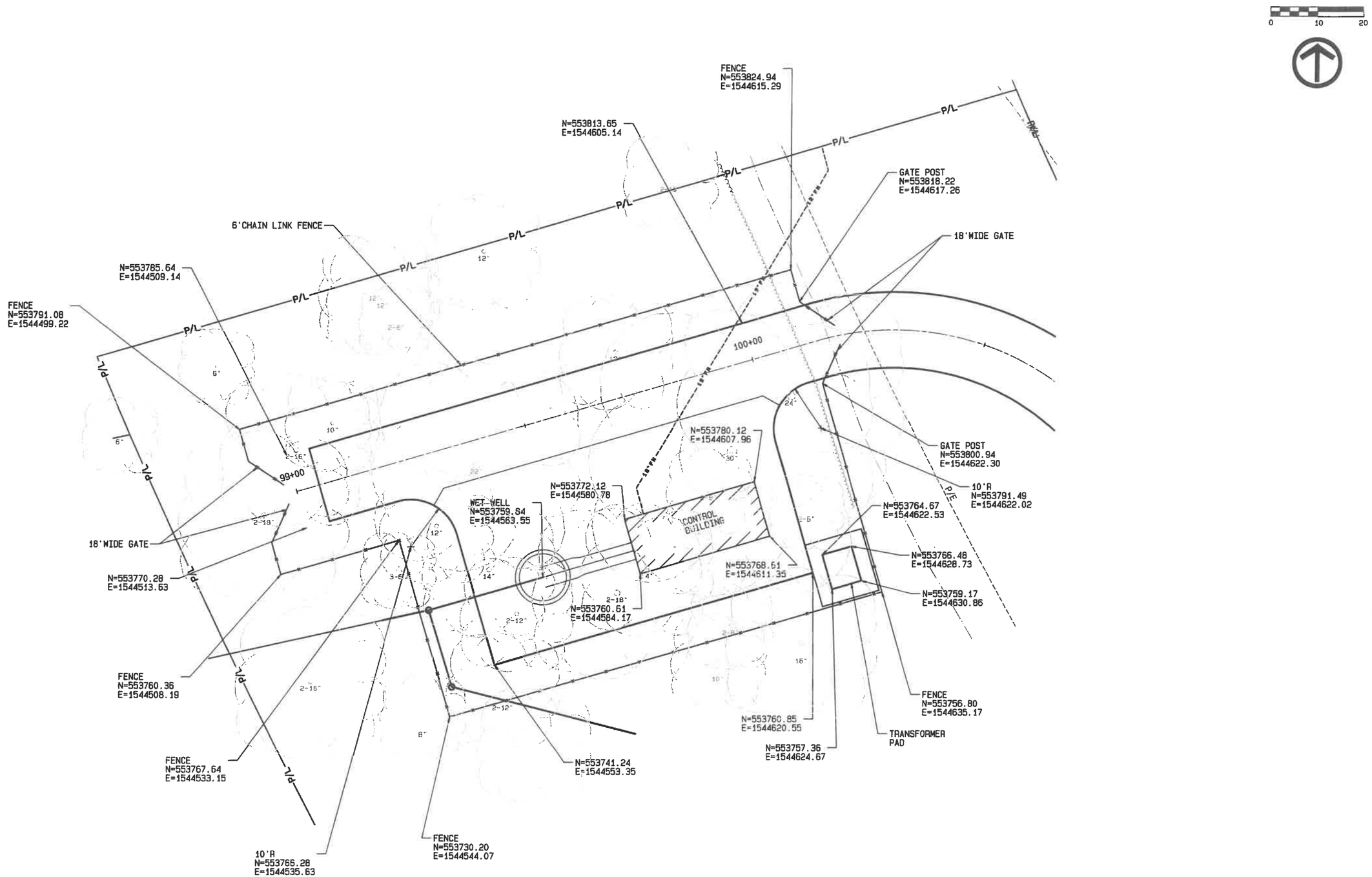

CONTROL POINT	COORDINATES	BENCHMARK	ELEVATION	DATE	REVISIONS

SCALE	AS NOTED
DRAWN	DLL
CHECKED	HRV
APPROVED	HRV
DATE	9-5-19
A.C.	

V&K

VEENSTRA & KIMM, INC.

3000 Westown Parkway • West Des Moines, Iowa 50266-1320
515-225-8000 • 515-225-7848 (FAX) • 800-241-8000 (WATS)

LIFT STATION LAYOUT PLAN

DWG. NO. 7

PROJECT 102217

P:\102217\MODEL GRAVITY SEWER AT LIFT STATION\CIVIL\102217 SITE PLAN APPLICATION.pro

PLOTTED: Sep 5,2019 14:42:24 Thu

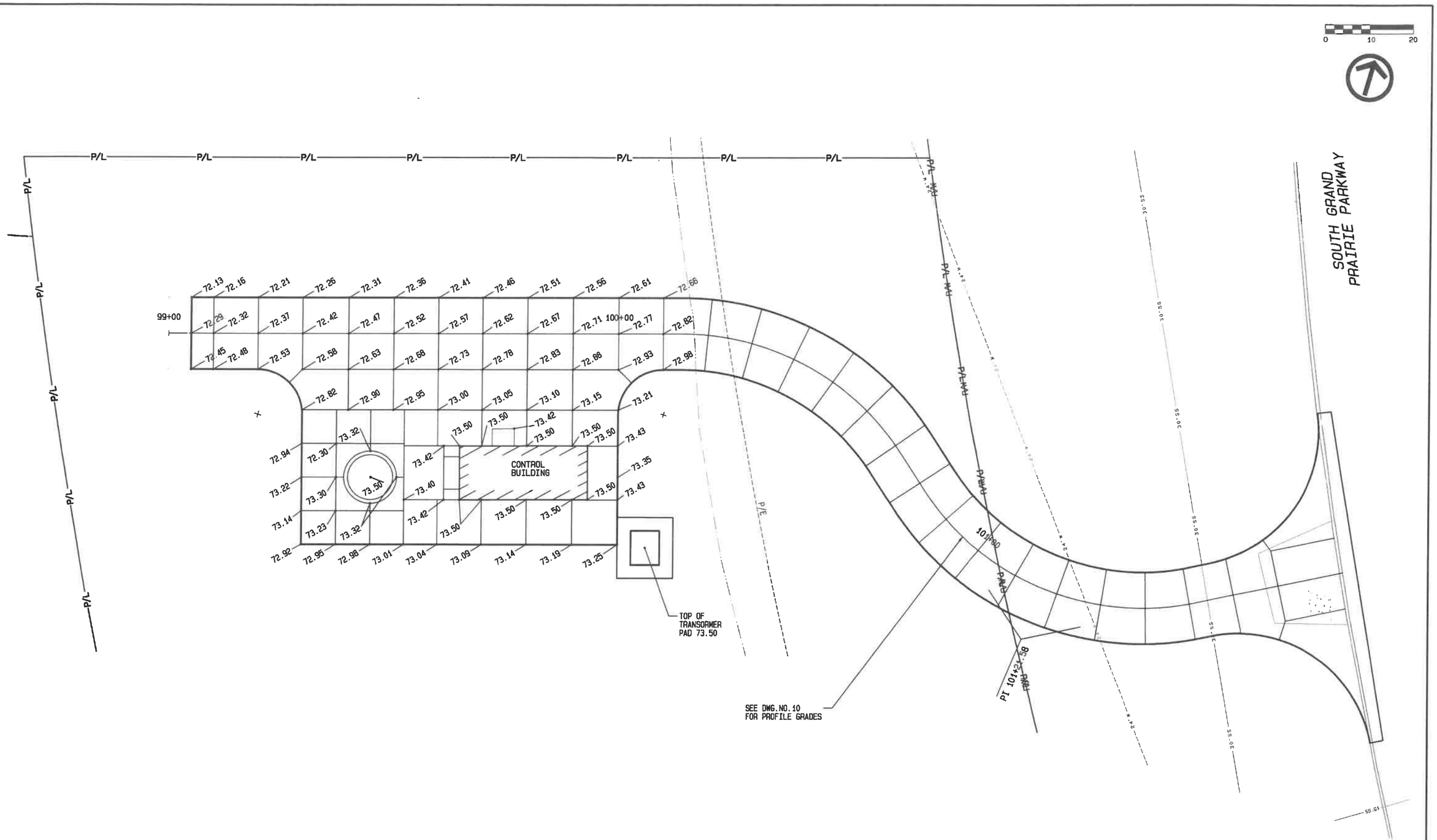

CONTROL POINT	COORDINATES	BENCHMARK	ELEVATION

DATE	REVISIONS

SCALE	AS NOTED
DRAWN	DLL
CHECKED	HRV
APPROVED	HRV
DATE	9-5-19
A.C.	

V&K

VEENSTRA & KIMM, INC.

3000 Westown Parkway • West Des Moines, Iowa 50266-1320
515-225-8000 • 515-225-7848 (FAX) • 800-241-8000 (WATS)

LIFT STATION SPOT ELEVATIONS

DWG. NO. 8

PROJECT 102217

P:\102217\TMODEL GRAVITY SEWER AT LIFT STATION\CIVIL\102217 SITE PLAN APPLICATION.dpc

PLOTTED: Sep 5, 2019 14:42:50 Thu

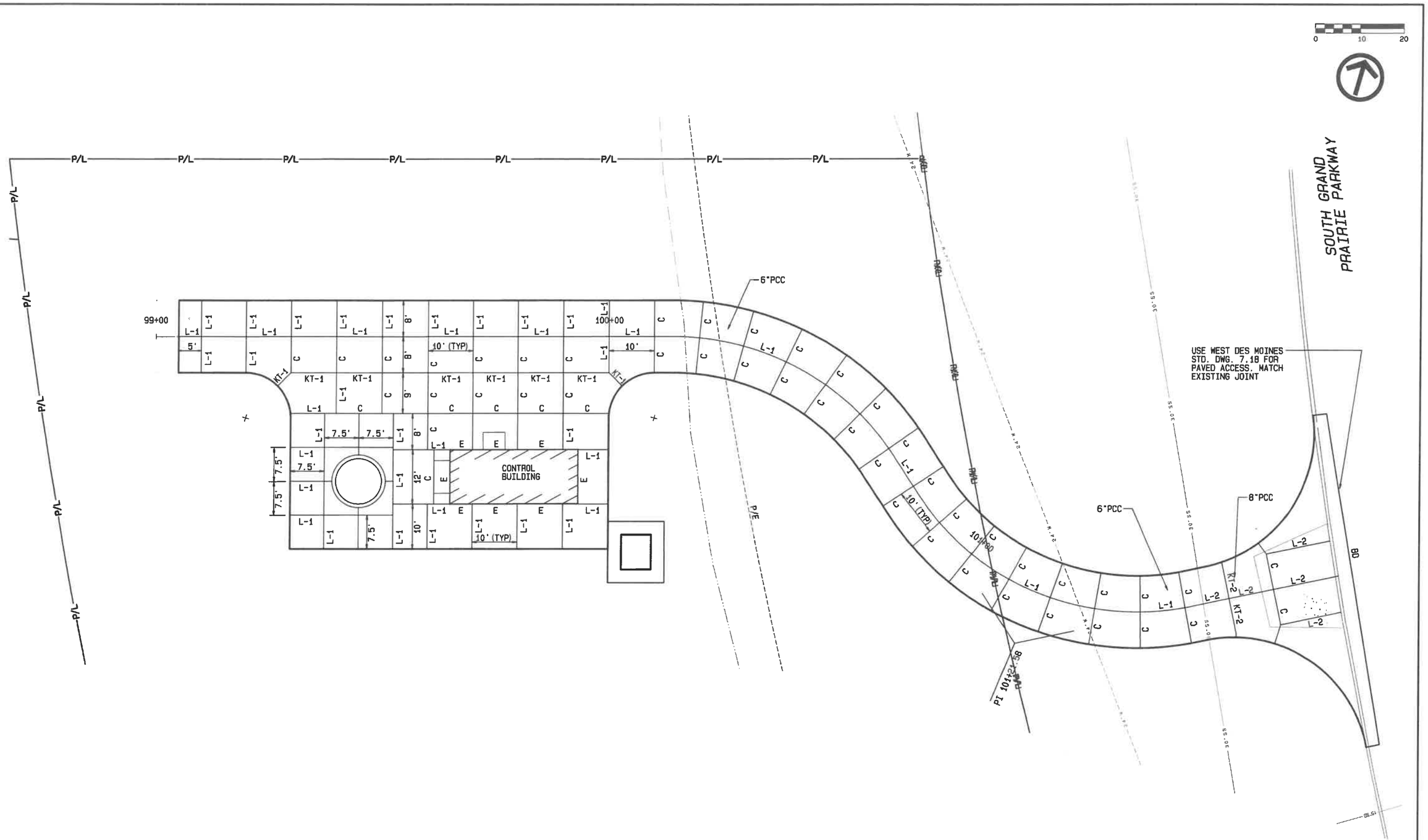

CONTROL POINT	COORDINATES	BENCHMARK	ELEVATION	DATE	REVISIONS

SCALE	AS NOTED
DRAWN	DLL
CHECKED	HRV
APPROVED	HRV
DATE	9-5-19
A.C.	

V&K

VEENSTRA & KIMM, INC.

3000 Westown Parkway • West Des Moines, Iowa 50266-1320
515-225-8000 • 515-225-7848 (FAX) • 800-241-8000 (WATS)

LIFT STATION JOINTING PLAN

DWG. NO. 9

PROJECT 102217

P:\102217\MODEL GRAVITY SEWER AT LIFT STATION\CIVIL\102217 SITE PLAN APPLICATION.pro

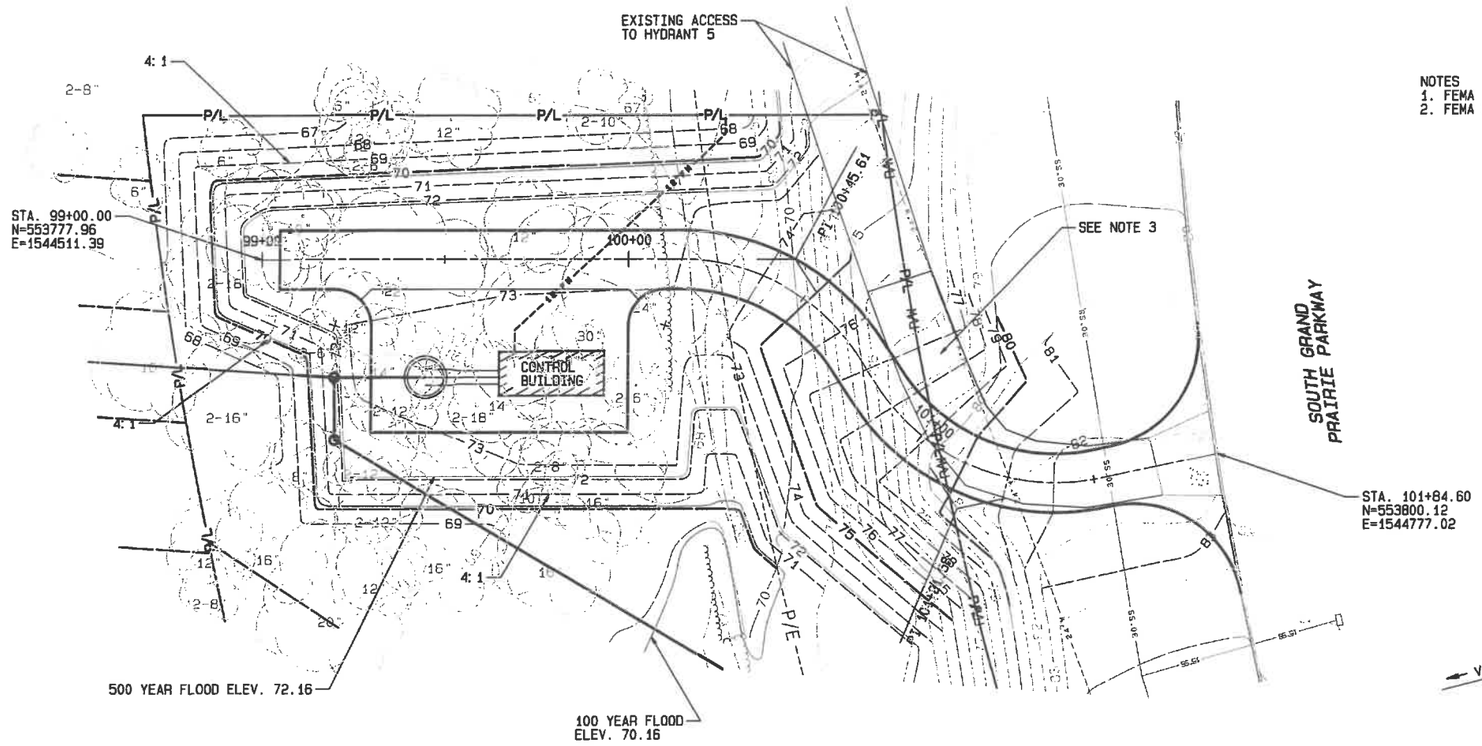

NOTES
1. FEMA 100 YEAR FLOOD ELEV.= 70.16.
2. FEMA 500 YEAR FLOOD ELEV.= 72.16.

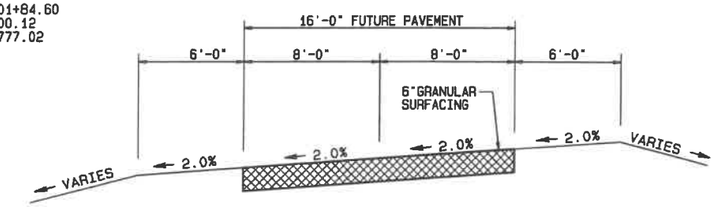

GRANULAR DRIVE CROSS SECTION
NO SCALE

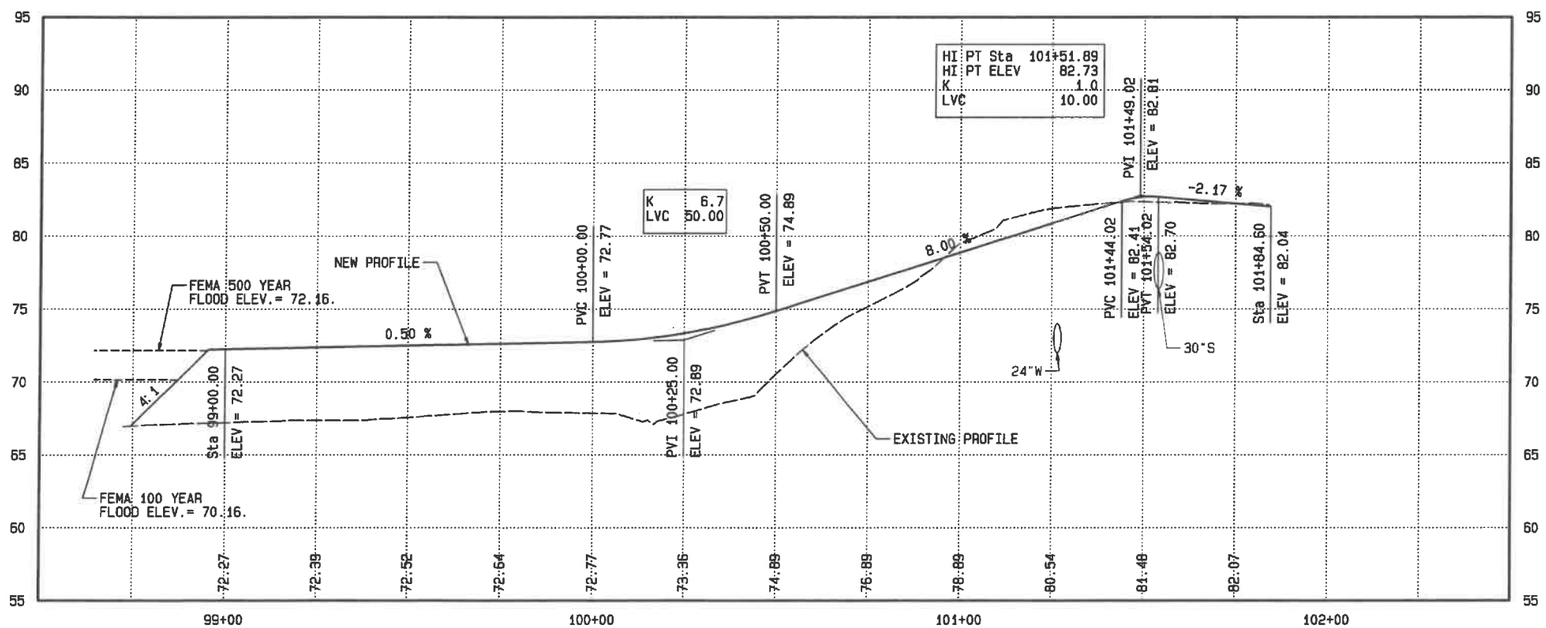

NOTE
1. THE GRANULAR SURFACING OF THE DRIVEWAY IS TEMPORARY TO PROVIDE CONSTRUCTION ACCESS TO THE LIFT STATION SITE AND TO THE CONSTRUCTION OF THE SANITARY SEWER WESTERLY OF THE LIFT STATION SITE. THE DRIVEWAY WILL BE PAVED AFTER THE SANITARY SEWER CONSTRUCTION HAS BEEN COMPLETED.
2. THE DRIVEWAY PROFILE APPLIES TO BOTH TEMPORARY AND PAVED DRIVEWAY.
3. PROVIDE GRANULAR SURFACING AS REQUIRED ON THE DES MOINES WATER WORKS DRIVE LOCATED IN THE CONSTRUCTION AREA OF THE LIFT STATION SITE TO MAINTAIN ACCESS TO EXISTING HYDRANT 5 AND VALVE.

PLOTTED: Sep 5,2019 14:43:15 Thu

CONTROL POINT	COORDINATES	BENCHMARK	ELEVATION	DATE	REVISIONS

SCALE	AS NOTED
DRAWN	DLL
CHECKED	HRV
APPROVED	HRV
DATE	9-5-19
A.C.	

VEENSTRA & KIMM, INC.
3000 Westown Parkway • West Des Moines, Iowa 50266-1320
515-225-8000 • 515-225-7848 (FAX) • 800-241-8000 (WATS)

ACCESS DRIVE

DWG. NO. 10

PROJECT 102217

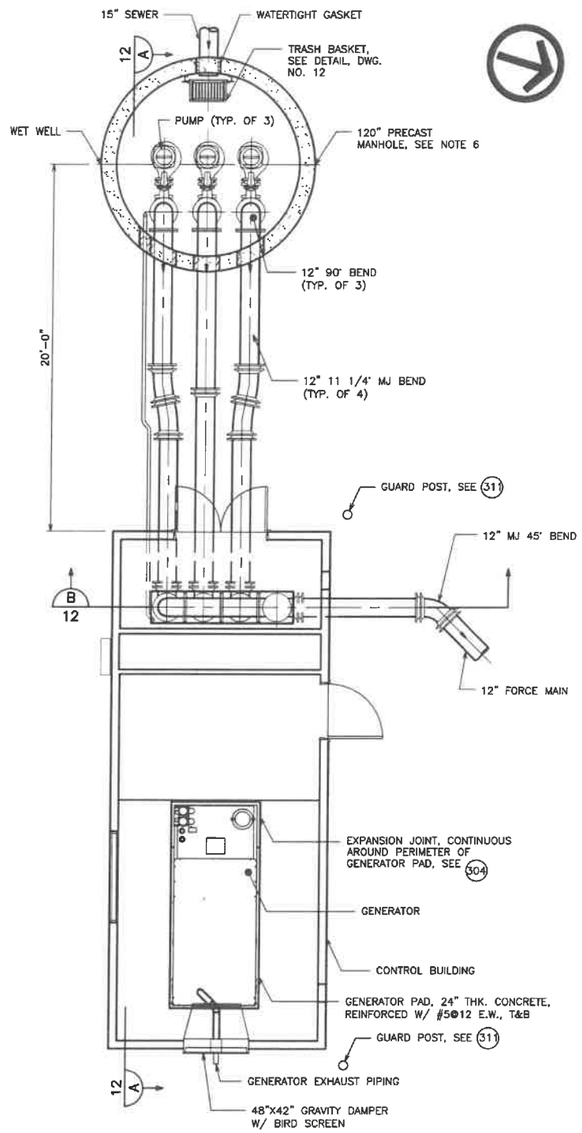

PLAN
SCALE: 1/4" = 1'-0"

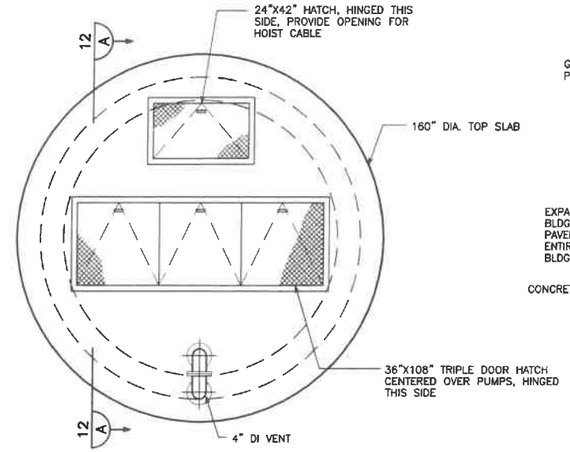

TOP VIEW
SCALE: 3/8" = 1'-0"

NOTES:

1. CONCRETE 4,000 PSI CLASS C. MEET REQUIREMENTS OF SUDAS SECTION 6010.
2. REINFORCING STEEL: 60 KSI UNCOATED. DO NOT FIELD BEND.
3. WET WELL: MEET REQUIREMENTS OF SUDAS SECTION 6010. INTEGRAL BASE NOT ALLOWED. PROVIDE CAST IN PLACE BASE. DO NOT PROVIDE STEPS. PROVIDE GASKETED JOINTS.
4. COMPACTED GRANULAR SUBBASE: CRUSHED MATERIAL MEET REQUIREMENTS OF IDOT SECTION 4121.
5. PIPING & FITTINGS: ALL TO BE DUCTILE IRON UNLESS OTHERWISE NOTED. MEET REQUIREMENTS OF SUDAS SECTION 4010. INSIDE PIPING CLASS 53, BURIED PIPING CLASS 52. PUSH ON OR MECHANICAL JOINT FITTINGS & JOINTS FOR BURIED PIPING. FLANGED JOINTS WITH FULL RED RUBBER GASKETS FOR INSIDE PIPING. STAINLESS STEEL BOLTS & HARDWARE. COMPACT FITTINGS ALLOWED. TRACER WIRE NOT REQ'D. BETWEEN WET WELL & CONTROL BUILDING. PROVIDE INTERIOR PIPE LINING. POLYETHYLENE ENCASEMENT REQ'D. FOR ALL BURIED DUCTILE IRON PIPING.
6. LINE INTERIOR WET WELL WALLS & UNDER SIDE OF TOP SLAB.

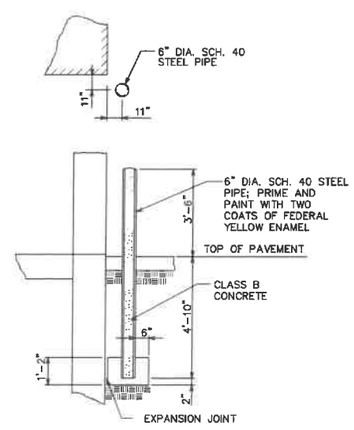

GUARD POST DETAIL 311
NO SCALE

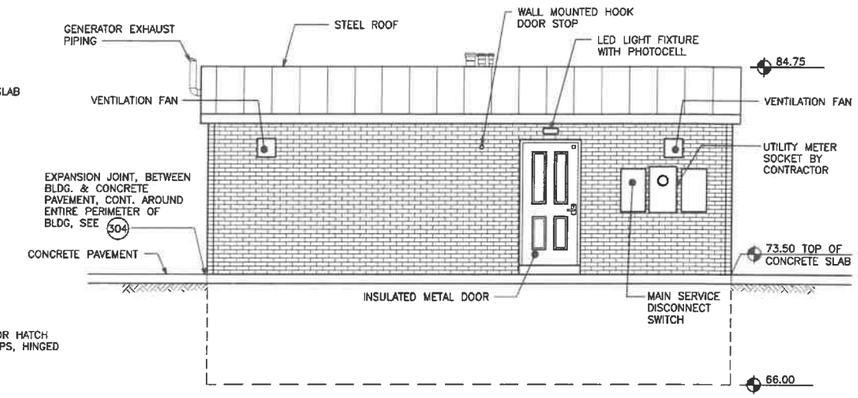

NORTH ELEVATION
SCALE: 1/4" = 1'-0"

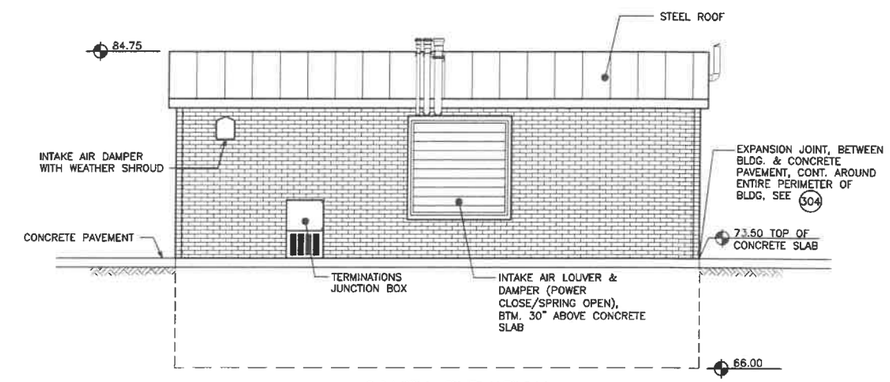

SOUTH ELEVATION
SCALE: 1/4" = 1'-0"

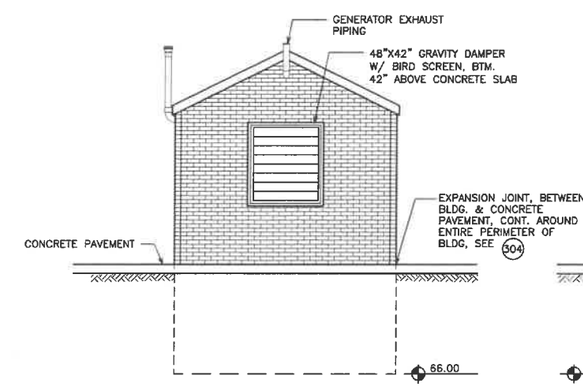

EAST ELEVATION
SCALE: 1/4" = 1'-0"

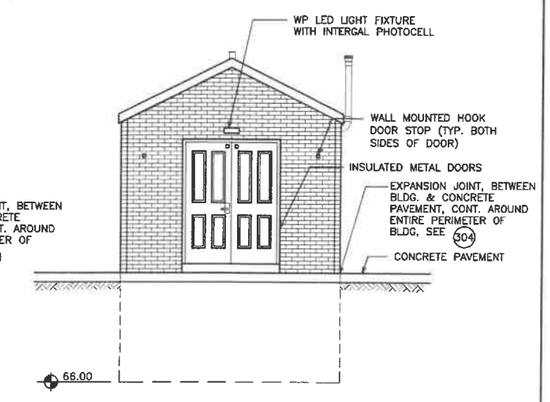

WEST ELEVATION
SCALE: 1/4" = 1'-0"

SCALE: 1/4"=1'-0" (0', 4', 8')

SCALE: 3/8"=1'-0" (0', 3', 6')

BENCHMARK	ELEVATION	VERIFY SCALE	DATE	REVISIONS		
		BAR IS ONE INCH ON ORIGINAL DRAWING. 0 — 1" IF NOT ONE INCH ON THIS SHEET, ADJUST SCALES ACCORDINGLY.			SCALE AS NOTED DRAWN JPB CHECKED FSA APPROVED HRV JR DATE 7/1/19 A.C.	

V&K

VEENSTRA & KIMM, INC.
3000 Westown Parkway • West Des Moines, Iowa 50266-1320
515-225-8000 • 515-225-7848 (FAX) • 800-241-8000 (WATS)

LIFT STATION

DWG. NO. 11

PROJECT 102217

M:\Projects\102217\102217 - LIFT STATION\102217-Lift Station.dwg, 7/2/2019 11:33:02 AM, DWFG ePlot.pc3

P:\102217\TMODEL GRAVITY SEWER AT LIFT STATION\CIVIL\102217 SITE PLAN APPLICATION.prp

PLOTTED: Sep 5,2019 14:44:01 Thu

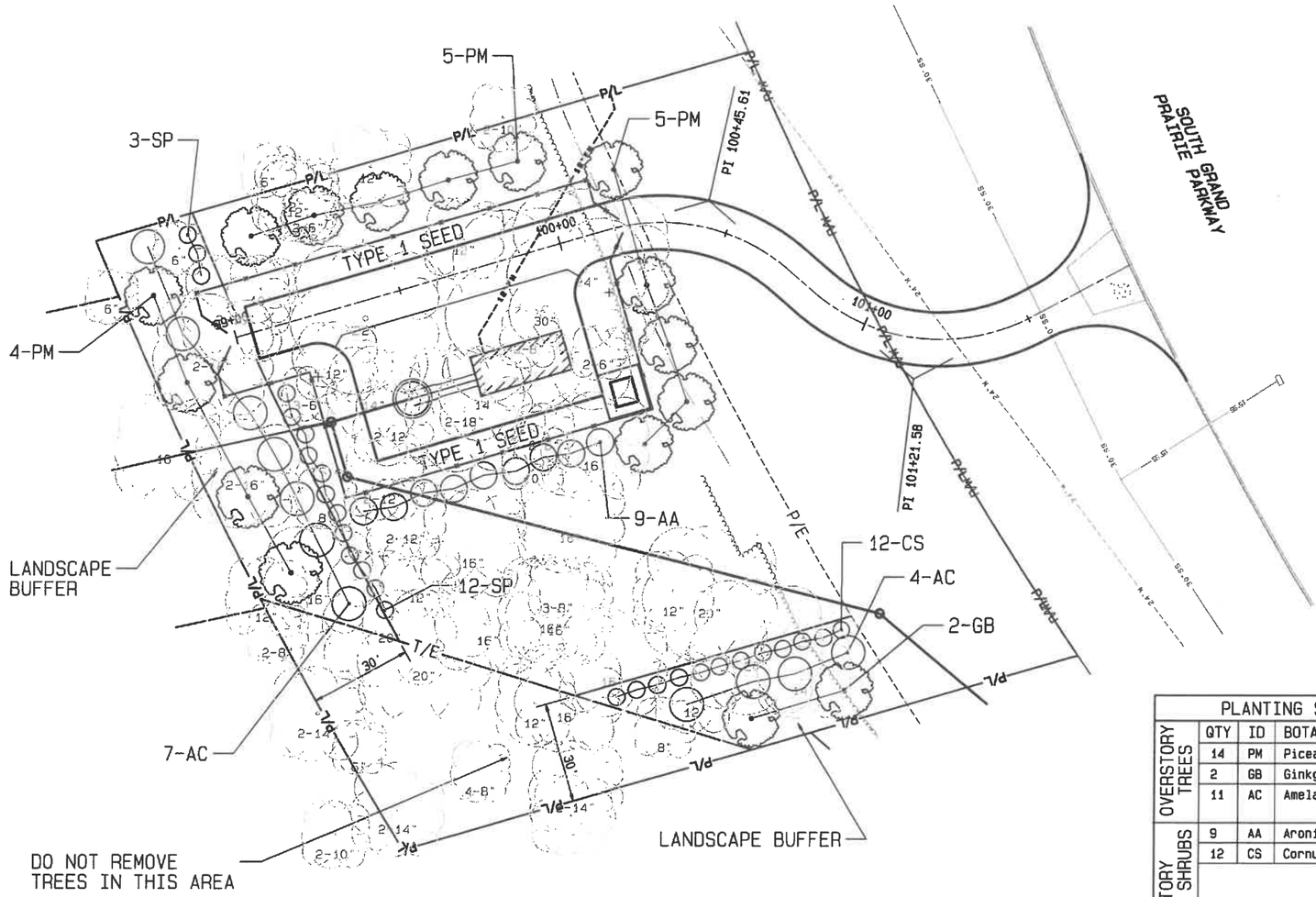

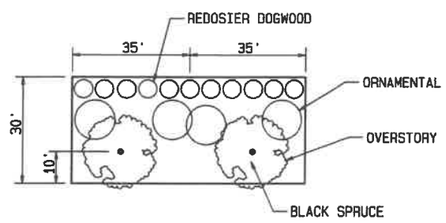

TYPICAL LANDSCAPE BUFFER

OPEN SPACE LANDSCAPE REQUIREMENTS

OPEN SPACE: 25%
REQUIRED OPEN SPACE = 8,029 SF
PROVIDED OPEN SPACE = 34,835 SF

TREES

TOTAL TREES REQUIRED (2 PER 3,000 SF OF 25% OPEN SPACE)
6 TREES REQUIRED
10 TREES PROVIDED

SHRUBS

TOTAL SHRUBS REQUIRED (3 PER 3,000 SF OF 25% OPEN SPACE)
9 SHRUBS REQUIRED
9 SHRUBS PROVIDED

BUFFER LANDSCAPE REQUIREMENTS

PER 30'WIDE X 35'LONG BUFFER
1 OVERSTORY/EVERGREEN TREE
2 ORNAMENTAL TREES
6 SHRUBS

PLANTING SCHEDULLE

	QTY	ID	BOTANICAL NAME	COMMON NAME	SIZE	METHOD
OVERSTORY TREES	14	PM	Picea mariana	BLACK SPRUCE	2-1 1/2" Cal.	B&B
	2	GB	Ginkgo biloba 'Autumn Gold'	AUTUMN GOLD GINKGO	2-1 1/2" Cal.	B&B
	11	AC	Amelanchier canadensis	SERVICEBERRY	5 Gal.	Cont.
UNDERSTORY TREES AND SHRUBS	9	AA	Aronia arbutifolia	RED CHOKECHERRY	5 Gal.	Cont.
	12	CS	Cornus sericea	REDOSIER DOGWOOD	5 Gal.	Cont.
SHRUBS	15	SP	Salix purpurea Nana	PURPLEOSIER WILLOW NANA	3 Gal.	Cont.
SEEDING	SUDAS TYPE 1 SEED MIXTURE WITHIN FENCED AREA AND WITHIN SOUTH GRAND PRAIRIE PARKWAY ROW.					
	SUDAS TYPE 2 SEED MIXTURE FOR ALL OTHER AREAS OF SITE DISTURBED BY CONSTRUCTION.					

CONTROL POINT	COORDINATES	BENCHMARK	ELEVATION	DATE	REVISIONS

SCALE	AS NOTED
DRAWN	DLL
CHECKED	HRV
APPROVED	HRV
DATE	9-5-19
A.C.	

V&K

VEENSTRA & KIMM, INC.

3000 Westown Parkway • West Des Moines, Iowa 50266-1320
515-225-8000 • 515-225-7848 (FAX) • 800-241-8000 (WATS)

SITE PLAN - LANDSCAPING

DWG. NO. 12

PROJECT 102217

P:\102217\MODEL GRAVITY SEWER AT LIFT STATION\CIVIL\102217 SITE PLAN APPLICATION.dwg

PLOTTED: Sep 5, 2019 14:44:31 Thu

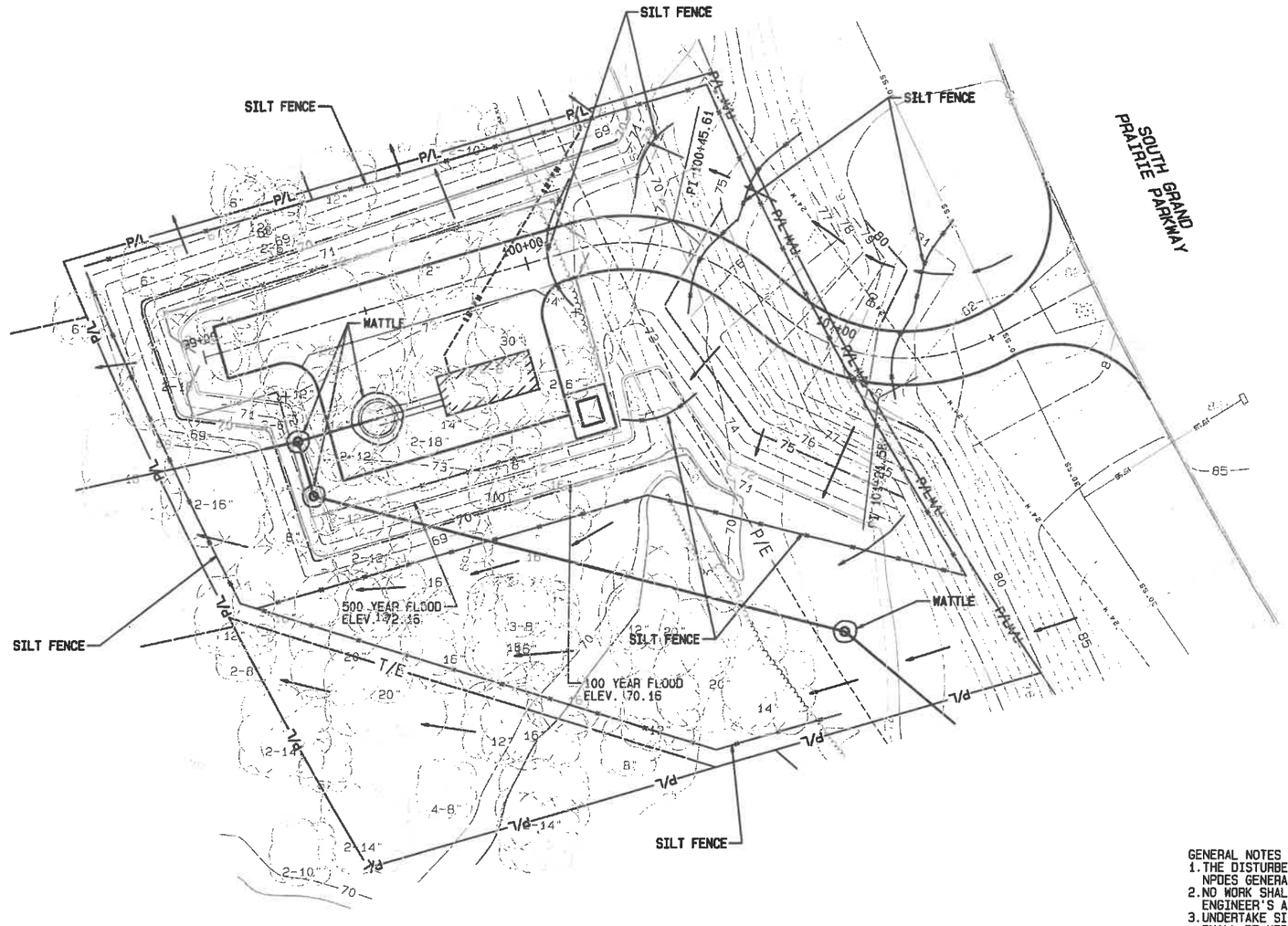

0 20 40

GENERAL NOTES

1. THE DISTURBED AREA OF THE SITE IS LESS THAN ONE ACRE AND THE NPDES GENERAL PERMIT NO.2 AND SWPPP ARE NOT REQUIRED FOR THIS PROJECT.
2. NO WORK SHALL BE PERFORMED BEYOND THE CONSTRUCTION LIMITS WITHOUT ENGINEER'S APPROVAL.
3. UNDERTAKE SITE CLEANUP ON A DAILY BASIS. SOUTH GRAND PRAIRIE PARKWAY SHALL BE KEPT CLEAN OF MUD AND DEBRIS AT ALL TIMES.
4. REMOVE TREES ONLY WITHIN THE CONSTRUCTION LIMITS AND AS NECESSARY TO IMPLEMENT THE PROJECT.
5. CONTRACTOR IS RESPONSIBLE FOR ADDING, MAINTAINING AND ADJUSTING SILT FENCES AND WATTLES AS NECESSARY TO PREVENT EROSION OF THE SITE.
6. ALL WASH WATER FOR CLEANING TRUCKS AND EQUIPMENT SHALL BE CONTAINED, TREATED AND PROPERLY DISPOSED.

CONTROL POINT	COORDINATES	BENCHMARK	ELEVATION

DATE	REVISIONS

SCALE	AS NOTED
DRAWN	DLL
CHECKED	HRV
APPROVED	HRV
DATE	9-5-19
A.C.	

V&K

VEENSTRA & KIMM, INC.

3000 Westown Parkway • West Des Moines, Iowa 50266-1320
515-225-8000 • 515-225-7848 (FAX) • 800-241-8000 (WATS)

EROSION CONTROL PLAN

DWG. NO. 13

PROJECT 102217

EXHIBIT II

Prepared by: B. Portz, City of West Des Moines Development Services, P.O. Box 65320, West Des Moines, IA 50265-0320, 515-222-3620; When Recorded, Return to: City Clerk, City of West Des Moines, P. O. Box 65320, West Des Moines, IA 50265-0320

RESOLUTION

A RESOLUTION OF THE CITY COUNCIL OF THE CITY OF WEST DES MOINES, APPROVING THE RACCOON RIVER BASIN 5 LIFT STATION SITE PLAN (SP-004421-2019) TO ALLOW CONSTRUCTION OF A SANITARY SEWER LIFT STATION.

WHEREAS, pursuant to the provisions of Title 9, Zoning, Chapter 1 et seq, of the West Des Moines Municipal Code, the applicant, The City of West Des Moines, in conjunction with the property owner, Raccoon River Land Company, LLC has requested approval for the Raccoon River Basin 5 Lift Station Site Plan (SP-004421-2019) for that property located at 3105 SW Grand Prairie Parkway and legally described below for the purpose of constructing a sanitary sewer lift station and associated site improvements:

Legal Description of Property

A tract of land located in the Northeast 1/4 of the Northeast 1/4 of Section 33, Township 78 North, Range 26 West of the 5th P.M., Dallas County, Iowa. Said tract being more particularly described as follows:

Commencing at the Southeast corner of the Northeast 1/4 of the Northeast 1/4 of said Section 33; thence North 00°06'32" West (all bearings referenced to Grid North Iowa Regional Coordinate System Zone 8), 10.27 feet along the East line of said Northeast 1/4 of the Northeast 1/4 to the Westerly right-of-way line of SW Grand Prairie Parkway as shown on the Acquisition Plats thereof recorded in Book 2017 on Page 8269 in the Dallas County Recorder's Office; thence North 50°10'56" West, 263.51 feet along said Westerly right-of-way line to the beginning of a tangent curve concave Northeasterly and having a radius of 1182.50 feet; thence Northwesterly along said right-of way line and along said curve through a central angle of 16°02'27" an arc distance of 331.06 feet, said curve having a chord which bears North 42°09'42" West, 329.98 feet to the point of beginning; thence continuing along said right-of way line and along said curve through a central angle of 09°56'55" an arc distance of 205.32 feet, said curve having a chord which bears North 29°10'02" West, 205.06 feet; thence on a non-tangent line South 73°35'34" West, 201.59 feet to the beginning of a non-tangent curve concave Northeasterly and having a radius of 1382.50 feet; thence Southeasterly along said curve through a central angle of 08°26'53" an arc distance of 203.84 feet, said curve having a chord which bears South 27°17'06" East, 203.66 feet; thence on a non-tangent line North 73°35'34" East, 208.45 feet to the point of beginning.

Containing 40,904 square feet, more or less.

WHEREAS, studies and investigations were made, and staff reports and recommendations were submitted which is made a part of this record and herein incorporated by reference; and

WHEREAS, on September 9, 2019, the Plan and Zoning Commission did recommend to the City Council approval of the Raccoon River Basin 5 Lift Station Site Plan (SP-004421-2019); and

WHEREAS, on, September 16, 2019, this City Council held a duly-noticed Meeting to consider the application for Raccoon River Basin 5 Lift Station site plan (SP-004421-2019); and

NOW, THEREFORE, THE CITY COUNCIL OF THE CITY OF WEST DES MOINES DOES RESOLVE AS FOLLOWS:

SECTION 1. The findings, for approval, stated in the staff report, dated September 16, 2019, or as amended orally at the City Council meeting of September 16, 2019, are adopted.

SECTION 2. SITE PLAN (SP-004421-2019) to allow construction of a sanitary sewer lift station is approved, subject to compliance with all the conditions in the staff report, dated September 16, 2019, including conditions added at the meeting, and attached hereto as Exhibit "A". Violation of any such conditions shall be grounds for revocation of the entitlement, as well as any other remedy which is available to the City.

PASSED AND ADOPTED on September 16, 2019.

_____
Steven K. Gaer
Mayor

ATTEST:

_____
Ryan Jacobson
City Clerk

I HEREBY CERTIFY that the foregoing resolution was duly adopted by the City Council of the City of West Des Moines, Iowa, at a regular meeting held on September 16, 2019, by the following vote:

ATTEST:

_____
Ryan Jacobson
City Clerk

Exhibit A
Conditions of Approval

1. The applicant paving the access road to the site at the completion of the adjacent trunk sewer project or by December 21, 2021, whichever occurs first.