CITY OF WEST DES MOINES
CITY COUNCIL MEETING COMMUNICATION

Date: April 20, 2020

ITEM: Water Tower Lighting, 505 S. 50th Street – Approve Minor Modification to Site Plan to allow elevated directional lighting- West Des Moines Water Works – MML1-004686-2020

Resolution: Approval of Minor Modification Level1

FINANCIAL IMPACT: Undetermined.

BACKGROUND: The applicant, West Des Moines Water Works, with permission from the property owner, City of West Des Moines, requests approval of a minor modification to a site plan to illuminate the logos and name of the city on the bowl of the water tower. Four 30-foot-tall light poles will be installed with LED lights directed at the logos and name of the city on the bowl of the water tower.

Plan and Zoning Commission Action:
Vote: 6 - 0 for approval, with Commissioner Drake absent.
Date: April 13, 2020
Motion: Adopt a resolution recommending the City Council approve the Minor Modification Level 1

OUTSTANDING ISSUES: There are no outstanding issues. This is an example of a project that was enabled by the passage of the Community Benefit Ordinance.

The following items of interest are noted in the attached Plan and Zoning Commission report (see Exhibit I):

- Applicant's Request
- City Council Subcommittee - Development & Planning: *February 3, 2020*
- Staff Review and Comments
  - *Lighting Test*
- Comprehensive Plan Consistency Findings
- Staff Recommendations and Conditions of Approval
- Owner/Applicant/Applicant Representative Information

RECOMMENDATION: Based upon the preceding review and a finding of consistency with the goals and policies of the Comprehensive Plan the Plan and Zoning Commission recommends the City Council approve the Minor Modification Level 1 application to install lighting to illuminate the logos and name of the city on the bowl of the water tower at 505 S. 50th Street, subject to the applicant meeting all City Code requirements.

Lead Staff Member: Kara Tragesser, AICP

Staff Reviews:

Department Director	
Appropriations/Finance	
Legal	
Agenda Acceptance	

PUBLICATION(S) (if applicable)

Published In	
Date(s) Published	
Letter sent to surrounding property owners	

SUBCOMMITTEE REVIEW (if applicable)

Committee	Development and Planning		
Date Reviewed	February 3, 2020		
Recommendation	Yes ☒	No ☐	Split ☐

ATTACHMENTS:

- Exhibit I - Plan and Zoning Commission Communication
  - Attachment A - Commission Resolution
    - Exhibit A - Conditions of Approval
  - Attachment B - Location Map
  - Attachment C - Site Plan
  - Attachment D – Lighting Information
  - Attachment E – Demonstration Pictures
- Exhibit II - City Council Resolution
  - Exhibit A - Conditions of Approval

EXHIBIT I

CITY OF WEST DES MOINES
PLAN AND ZONING COMMISSION COMMUNICATION

Meeting Date: April 13, 2020

Item: Water Tower Lighting, 505 S. 50th Street – Approve Minor Modification to Site Plan to allow elevated directional lighting- West Des Moines Water Works – MML1-004686-2020

Requested Action: Approval of Minor Modification Level 1 application to Site Plan

Case Advisor: Kara Tragesser, AICP

Applicant's Request: The applicant, West Des Moines Water Works, with permission from the property owner, City of West Des Moines, requests approval of a minor modification to a site plan to illuminate the logos and name of the city on the bowl of the water tower. Four 30-foot-tall light poles will be installed with LED lights directed at the logos and name of the city on the bowl of the water tower.

City Council Subcommittee: This item was presented to the Development & Planning City Council Subcommittee at their February 3, 2020 meeting. Water Works General Manager, Christina Murphy explained the project. Deputy City Manager Letzring indicated that the project is proposed to be a joint project between the City and the West Des Moines Water Works. The Subcommittee was supportive of the project but did express concern with the lighting reflecting into the surrounding properties. In response to their concerns, a demonstration of the lighting was arranged.

Staff Review and Comment: There are no outstanding issues. Staff notes the following:

Lighting Test: On March 25, 2020, Water Works arranged a test simulation of the proposed lighting via mobile Musco lighting trailers. Although not required, Water Works mailed notice of the test to all property owners within 370' of the property, including notice to the developers of the senior living project immediately to the west and posted notice to the City's website. This staff person was present on the site to see the lighting. A copy of some of the pictures taken by Water Works staff are attached to the staff report as Attachment D. The notice requested individuals contact Water Works with any concerns after seeing the lighting test: no comments have been received as of the writing of this staff report.

Comprehensive Plan Consistency: The project has been reviewed for consistency with the Comprehensive Plan. Based upon that review, a finding has been made that the proposed project is consistent with the Comprehensive Plan in that the project is consistent with all of the goals and policies of the Comprehensive Plan and the land use map of the Comprehensive Plan.

Findings: This proposed project was distributed to various city departments for review and comment. Based upon that review, the following findings have been made on the proposed project:

1. The proposed development and use is consistent with the West Des Moines Comprehensive Plan in that the project has been reviewed for consistency with the Comprehensive Plan. Based upon that review, a finding has been made that the proposed project is consistent with the Comprehensive Plan in that the project is consistent with all of the goals and policies of the Comprehensive Plan.

2. The proposed development and use does assure compatibility of property uses within the zone and general area in that this project was reviewed by various City Departments for compliance with the Zoning Ordinance.

3. All applicable standards and conditions have been imposed which protects the public health, safety and welfare in that this project was reviewed by various City Departments and public agencies for compliance with the various state and local regulations. Based upon that review a finding is made

that the project has been adequately conditioned to protect the health, welfare and safety of the community.

4. There is adequate on-site and off-site public infrastructure to support the proposed development in that this project was reviewed by various public agencies and City Departments and public utilities to ensure that either the petitioner will construct or the project has been conditioned to construct adequate public infrastructure to serve the development.

5. The proposed development and use has met the requirements contained in the City Code in that this project was reviewed by various City Departments and the project has complied with or has been conditioned to comply with all City Code requirements.

6. The proposed development and use is in keeping with the scale and nature of the surrounding neighborhood in that the proposed project is consistent with the zoning designation and Comprehensive Plan which designates this site as suitable for development such as that proposed by this project.

Staff Recommendation and Conditions of Approval: Based upon the preceding review and a finding of consistency with the goals and policies of the Comprehensive Plan staff recommends the Plan and Zoning Commission adopt a resolution recommending the City Council approve the Minor Modification Level 1 to install elevated lighting for the S. 50th Street water tower, subject to the applicant meeting all City Code requirements.

Property Owner: City of West Des Moines
4200 Mills Civic Parkway
West Des Moines IA 50265

Applicant(s): William Mabuce
West Des Moines Water Works
1505 Railroad Avenue
West Des Moines IA 50265

Applicant's Representatives: same as Applicant

ATTACHMENTS:

Attachment A	-	Plan and Zoning Commission Resolution
Exhibit A		- Conditions of Approval
Attachment B	-	Location Map
Attachment C	-	Site Plan
Attachment D	-	Lighting Information
Attachment E	-	Demonstration Pictures

RESOLUTION NO. PZC- 20-014

A RESOLUTION OF THE PLAN AND ZONING COMMISSION OF THE CITY OF WEST DES MOINES, IOWA, RECOMMENDING TO THE CITY COUNCIL THAT IT APPROVE THE MINOR MODIFICATION LEVEL 1 TO INSTALL ELEVATED LIGHTING FOR THE WATER TOWER AT 505 S. 50TH STREET

WHEREAS, pursuant to the provisions of Title 9, Chapter 1 et seq, of the West Des Moines Municipal Code, the applicant, West Des Moines Water Works, in cooperation with the property owner, City of West Des Moines, has requested approval of a Minor Modification Level 1 to allow the installation of elevated lighting to illuminate the logo and lettering on the bowl of the water tower: and

WHEREAS, studies and investigations were made and staff reports and recommendations were submitted which is made a part of this record and herein incorporated by reference; and

WHEREAS, on April 13, 2020, this Commission held a duly-noticed meeting to consider the Minor Modification Level 1 application.

NOW, THEREFORE, THE PLAN AND ZONING COMMISSION OF THE CITY OF WEST DES MOINES DOES RESOLVE AS FOLLOWS:

SECTION 1. The findings, for approval, in the staff report, dated April 13, 2020, or as amended orally at the Plan and Zoning Commission meeting of April 13, 2020, are adopted.

SECTION 2. The Minor Modification Level 1 application to allow elevated lighting for the S. 50th Street water tower is recommended to the City Council for approval, subject to compliance with all the conditions in the staff report, dated April 13, 2020, including conditions added at the meeting, and attached hereto as Exhibit "A". Violation of any such conditions shall be grounds for revocation of the permit, as well as any other remedy which is available to the City.

PASSED AND ADOPTED on April 13, 2020.

_____
Erica Andersen, Chair
Plan and Zoning Commission

ATTEST:

_____
Recording Secretary

I HEREBY CERTIFY that the foregoing resolution was duly adopted by the Plan and Zoning Commission of the City of West Des Moines, Iowa, at a regular meeting held on April 13, 2020, by the following vote:

AYES:
NAYS:
ABSTENTIONS:
ABSENT:

ATTEST:

_____
Recording Secretary

Exhibit A
Conditions of Approval

No conditions of approval.

ATTACHMENT B

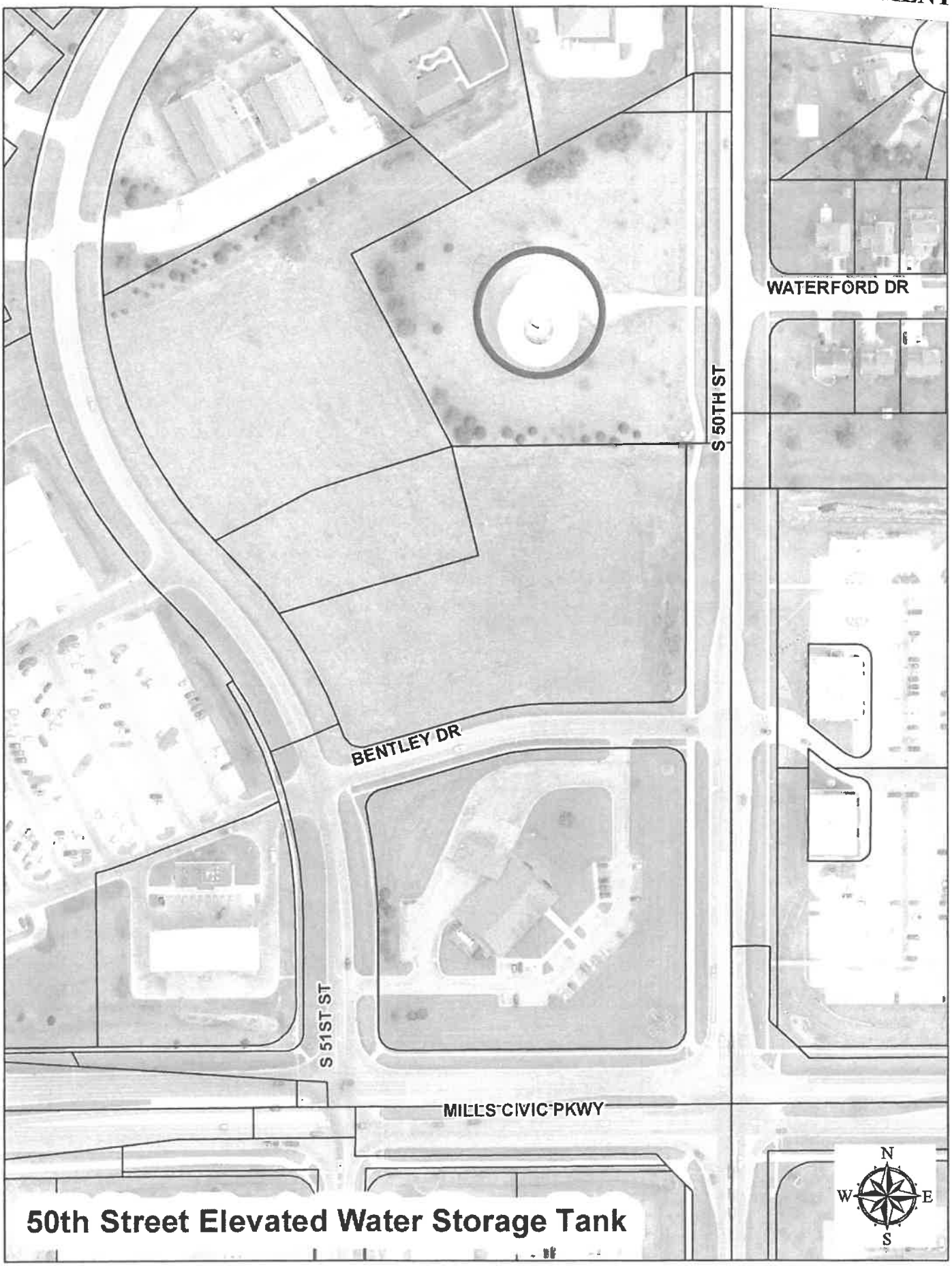

50th Street Elevated Water Storage Tank

ATTACHMENT C

WEST DES MOINES 50TH STREET WATER TOWER LIGHTING

505 S. 50TH STREET
WEST DES MOINES, IOWA, 50265

KCL ENGINEERING

300 4th Street
West Des Moines, IA 50265
515.724.7938
info@kclengineering.com

Consulting Engineering
Mechanical
Electrical
Plumbing

PROJECT LOCATION

NORTH

LICENSED PROFESSIONAL ENGINEER
ERIC HEYNEN
P24706
IOWA

I hereby certify that this engineering document was prepared by me or under my direct personal supervision and that I am a duly licensed Professional Engineer under the laws of the State of Iowa.

Eric Heynen 3/27/2020
(signature) (date)

ERIC HEYNEN, P.E.

License Number : P24706

My license renewal date is December 31, 2021

Pages or sheets covered by this seal: E. sheets

Owner Contact:
William Mabuce, PE
515-222-3510
william.mabuce@wdmww.com

Property Owner:
West Des Moines Water Works
1505 Railroad Avenue
West Des Moines, Iowa 50265

Design Contact:
James Deeds, PE
KCL Engineering
515-371-9970
jdeeds@kclengeering.com

Applicant:
West Des Moines Water Works
1505 Railroad Avenue
West Des Moines, Iowa 50265

ELECTRICAL SHEET LIST

E0.0 GENERAL NOTES AND SYMBOLS
E1.0 ELECTRICAL SITE PLAN
E2.0 ELECTRICAL INTERIOR PLAN

Legal Description of Property:
A tract of land, containing 3.33 acres, in the Northeast Quarter and the Southeast Quarter of Section 19, Township 78 North, Range 25 West of the Fifth Principal Meridian, in the City of West Des Moines, Polk County, Iowa, more particularly described as follows:

Commencing at the East ¼ Corner of said Section 19, with the eat line of the Southeast ¼ of said Section 18 having an assumed true bearing of S 0°00'00" E, with all subsequaent bearings referenced therefrom; thence S 0°00'00" E, a distance of four hundred thirty-nine and sixty-nine hundredths (439.69) feet; thence N 90°00'00" W, a distance of thirty-three (33.00) feet to a point on the west right-of-way line of 50th Street in the said City of West Des Moines and the point of the beginning; thence N 90°00'00" W, a distance of three hundred forty and thirty hundredths (340.30) feet; thence N 27°25'15" W, a distance of two hundred eighty-seven and eight hundredths (278.08) feet to the southerly line of a power line easement, one hundred (100) feet in width: thence N 62°34'45" E, along said southerly line of said power line easement, a distance of five hundred thirty-two and thirty-nine hundredths (532.39) feet to the west right-of-way line of said 50th Street; thence S0°01'51" W, along the said west right-of-way line of 50th Street, a distance of sixty and thirty-one hundredths (60.31) feet; thence S0°00'00" E, along said west right-of-way line of 50th Street, a distance of four hundred thirty-nine and sixty-none hundredths (439.69) feet to the point of beginning.

ELECTRICAL SYMBOLS

MP1	POLE MOUNTED LIGHT FIXTURE
	LIGHTING AND POWER PANEL – SURFACE MOUNTED
	CONDUIT CONCEALED IN FLOOR CONSTRUCTION OR UNDERGROUND
	EXPOSED CONDUIT
M	METER
3	NOTE REFERENCE

ELECTRICAL ABBREVIATIONS

AFG	ABOVE FINISHED GRADE	PC	PHOTOCELL
AIC	AMPS INTERRUPTING CAPACITY	R	EXISTING ITEM TO BE REMOVED
E	EXISTING ITEM TO REMAIN	+24"	INDICATES MOUNTING HEIGHT CENTER LINE OF DEVICE TO FINISHED FLOOR
EC	ELECTRICAL CONTRACTOR		

IOWA ONE CALL
1-800-292-8989
CALL - BEFORE - YOU - DIG

GENERAL NOTE:

UNDERGROUND FACILITIES, STRUCTURES, AND UTILITIES HAVE BEEN SHOWN BASED UPON INFORMATION OBTAINED FROM FIELD LOCATIONS BY UTILITY COMPANIES, AVAILABLE SURVEYS AND RECORDS. THEIR LOCATIONS MUST BE CONSIDERED APPROXIMATE ONLY. IT IS ALSO POSSIBLE THAT THERE MAY BE OTHER UNDERGROUND FACILITIES, STRUCTURES, AND UTILITIES IN EXISTENCE THAT ARE NOT SHOWN. IT IS THE RESPONSIBILITY OF EACH INDIVIDUAL PARTY REFERENCING THIS PLAN TO DETERMINE THE EXACT LOCATION AND TYPE OF UNDERGROUND FACILITIES ON THE SITE. HAND EXCAVATE AT CRITICAL POINTS AS NECESSARY TO VERIFY LOCATIONS, SIZES, ELEVATIONS, FLOW LINES, ETC. IF A PROBLEM OR INTERFERENCE EXISTS, NOTIFY ARCHITECT/ENGINEER BEFORE PROCEEDING.

DEMOLITION AND RENOVATION NOTES - ELECTRICAL

1. THE ELECTRICAL DEMOLITION DRAWING SHOWING EXISTING CONDITIONS HAS BEEN PREPARED BASED ON FIELD OBSERVATION. ADDITIONAL COMPONENTS MAY EXIST WHICH DO NOT SHOW., AND SUCH ITEMS SHALL BE DEALT WITH IN A MANNER SIMILAR TO THOSE ITEMS WHICH DO SHOW.
2. ALL EXISTING SYSTEMS (EXISTING AND/OR NEW) THAT ARE NOT AFFECTED BY THE SCOPE OF THE PROJECT ARE TO BE KEPT OPERATIONAL THROUGH THE DURATION OF THE PROJECT. COORDINATE ANY REQUIRED OUTAGES WITH THE OWNER IN ADVANCE OF SHUT DOWN.
3. DO NOT CUT EXISTING TELECOMMUNICATION WIRING, CABLES OR CONDUIT AS EXISTING SYSTEMS SHALL REMAIN OPERATIONAL DURING ALL PHASES OF CONSTRUCTION. CONTRACTOR WHO CUTS IN-SERVICE CABLES SHALL BE RESPONSIBLE FOR ANY AND ALL DOWNTIME AND COSTS TO REPAIR.
4. EQUIPMENT AND DEVICES SHOWN AS EXISTING OR AS REMOVE/RELOCATE SHALL BE PROTECTED AND HANDLED WITH APPROPRIATE CARE SO AS TO MAINTAIN FULL FUNCTIONAL AND AESTHETIC INTEGRITY OF THE DEVICE.

SITE NOTES - ELECTRICAL

1. UTILITIES SHOWN ON ELECTRICAL SITE PLAN ARE SCHEMATIC ONLY. VERIFY ALL SITE CONDITIONS AND DIMENSIONS ON SITE PRIOR TO COMPLETING BID AND ORDERING OF EQUIPMENT.
2. CONTRACTOR SHALL REPAIR ALL AFFECTED SURFACES AND RESTORE TO EXISTING CONDITIONS AT COMPLETION OF PROJECT.
3. WARNING - CALL 48 HOURS BEFORE YOU DIG: - IOWA LAW REQUIRES ANYONE DOING ANY EXCAVATION, FENCING, PLANTING OR DRILLING TO CALL 48 HOURS IN ADVANCE. HAND DIG WITHIN 18 INCHES OF ANY LOCATE MARK OR FLAG. IOWA ONE-CALL 1-800-292-8989.

CODES NOTES - ELECTRICAL

1. THE ELECTRICAL INSTALLATION SHALL BE IN ACCORDANCE WITH ALL LOCAL, STATE, AND NATIONAL CODES.
2. THE CURRENT ADOPTED EDITION OF THE ELECTRICAL CODE SHALL BE THE STANDARD FOR THE ELECTRICAL INSTALLATION. VERIFY WITH LOCAL OFFICIALS WHEN PERMITS ARE OBTAINED. NOTIFY DESIGN TEAM OF ANY DESCREPANCIES BETWEEN THE PROJECT MANUAL OR DRAWINGS AND THE GOVERNING CODE.

INSTALLATION NOTES - ELECTRICAL

1. CONTRACTORS SHALL FAMILIARIZE THEMSELVES WITH EXISTING CONDITIONS PRIOR TO BID.
2. RACEWAYS AND BOXES ARE SHOWN DIAGRAMMATICALLY ONLY AND INDICATE THE GENERAL AND APPROXIMATE LOCATION. THE LAYOUT DOES NOT NECESSARILY SHOW THE TOTAL NUMBER OF RACEWAYS OR BOXES FOR THE CIRCUITS REQUIRED, NOR ARE THE LOCATIONS OF INDICATED RUNS INTENDED TO SHOW THE ACTUAL ROUTING OF THE RACEWAYS.
3. PROVIDE A DEDICATED GREEN INSULATED GROUND CONDUCTORS TO ALL DEVICES. THE CONDUIT SYSTEM SHALL NOT BE USED AS THE ONLY EQUIPMENT GROUNDING METHOD.
4. BALANCE THE LOAD ON PANELS AS EVENLY AS POSSIBLE DURING INSTALLATION. CIRCUIT NUMBERING SHOWN ON PLANS MAY BE ADJUSTED.
5. PROVIDE FINAL TYPED PERMANENT PANEL DIRECTORY AT PROJECT COMPLETION.

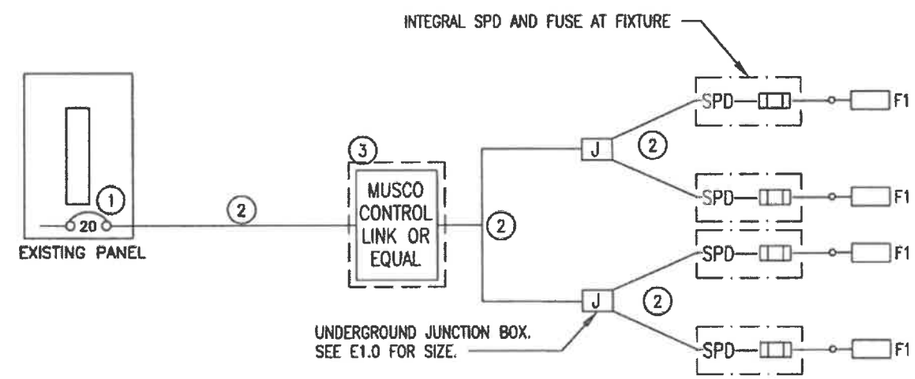

1. INSTALL 20A 2P SPARE BREAKER IN SPACES 18,20 FOR CIRCUIT TO LIGHTING. MOVE OVERHEAD DOOR BREAKER AND WIRING TO SPACE 16. EXISTING PANEL IS SQUARE D NQ PANEL WITH 10KAIC RATING.
2. ALL WIRING TO BE (2) #10 AWG +(1) #10 GND IN 1" CONDUIT UNLESS OTHERWISE NOTED.
3. ALTERNATE #1 – PROVIDE PRICING TO INCLUDE MUSCO CONTROL LINK OR EQUAL FOR DIMMING CAPABILITIES. BASE BID TO BE ASTRONOMICAL TIME CLOCK. TIME CLOCK TO BE INTERMATIC ET2805C OR APPROVED EQUAL.

1 WIRING DIAGRAM
NOT TO SCALE

KCL ENGINEERING

KCL ENGINEERING
300 4th Street
West Des Moines, Iowa 50265
info@kclengineering.com
515.724.7938

NOT FOR CONSTRUCTION

Revisions	Date

Project Number: 19083
Date: 03/27/2020

WEST DES MOINES 50TH STREET WATER TOWER LIGHTING
505 50TH STREET
WEST DES MOINES, IOWA

Sheet Name: GENERAL NOTES & SYMBOLS

Sheet: E0.0

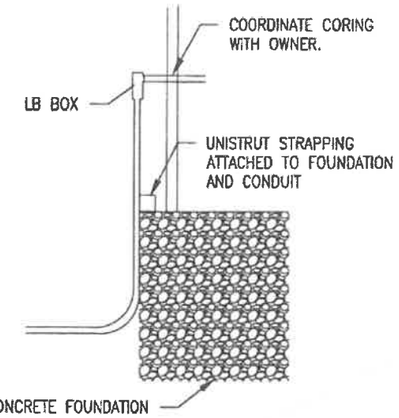

CONDUIT INSTALLATION DETAIL

NOT TO SCALE

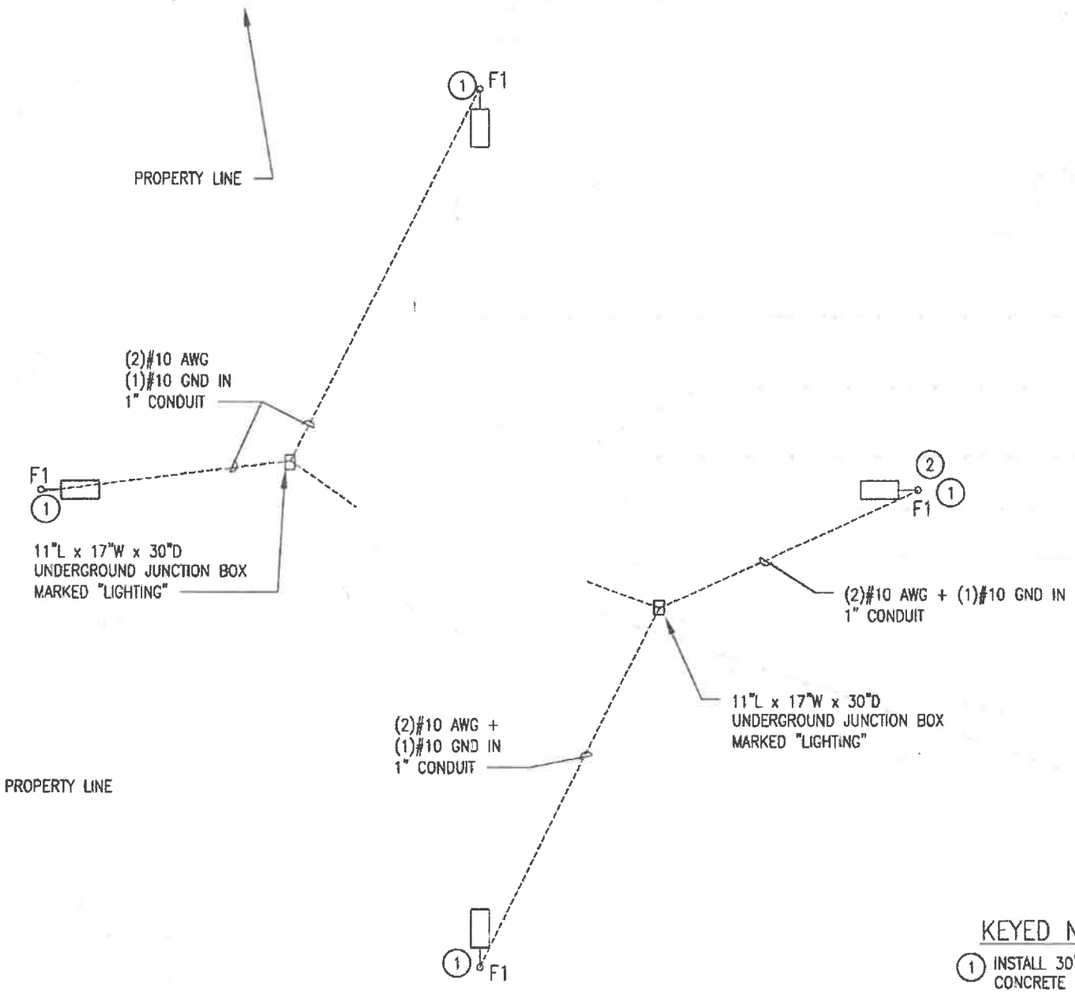

KEYED NOTES:

1. INSTALL 30' GALVANIZED POLE ON PRECAST CONCRETE BASE.
2. COORDINATE INSTALLATION OF POLE WITH EXISTING UTILITY IN THE AREA.

LUMINAIRE SCHEDULE

TYPE	MANUFACTURER	MODEL NUMBER	DESCRIPTION	MOUNTING	COLOR	VOLTAGE	APPROVED EQUALS
F1	MUSCO	80 LED LUMINAIRE	LED FLOOD LIGHT, DIMMABLE, FUSED 40,000 LUMENS 70 CRI, 4500K, 400W MAXIMUM. RATED FOR UPLIGHTING AND WET LOCATON INSTALLATION	INSTALLED ON 30' GALVANIZED POLE PROVIDED BY MUSCO	GRAY	240	AS APPROVED BY ENGINEER

GENERAL NOTES:
1 ALL FIXTURES SHALL BE U.L. OR SIMILARLY LISTED
2 CONTRACTOR IS RESPONSIBLE FOR ALL MISCELLANEOUS HARDWARE NECESSARY TO INSTALL AND SUPPORT THE LUMINAIRES
3 ALL FIXTURES SHALL HAVE A TEN (10) YEAR MANUFACTURERS WARRANTY UNLESS OTHERWISE NOTED

NORTH

SITE LIGHTING ELECTRICAL PLAN

SCALE: 1" = 50'-0"

KCL ENGINEERING

KCL ENGINEERING
300 4th Street
West Des Moines, Iowa 50265
info@kclengineering.com
515.724.7938

NOT FOR CONSTRUCTION

Revisions	Date

Project Number: 19083

Date: 03/27/2020

WEST DES MOINES 50TH STREET WATER TOWER LIGHTING
505 50TH STREET
WEST DES MOINES, IOWA

Sheet Name: ELECTRICAL SITE PLAN

Sheet: E1.0

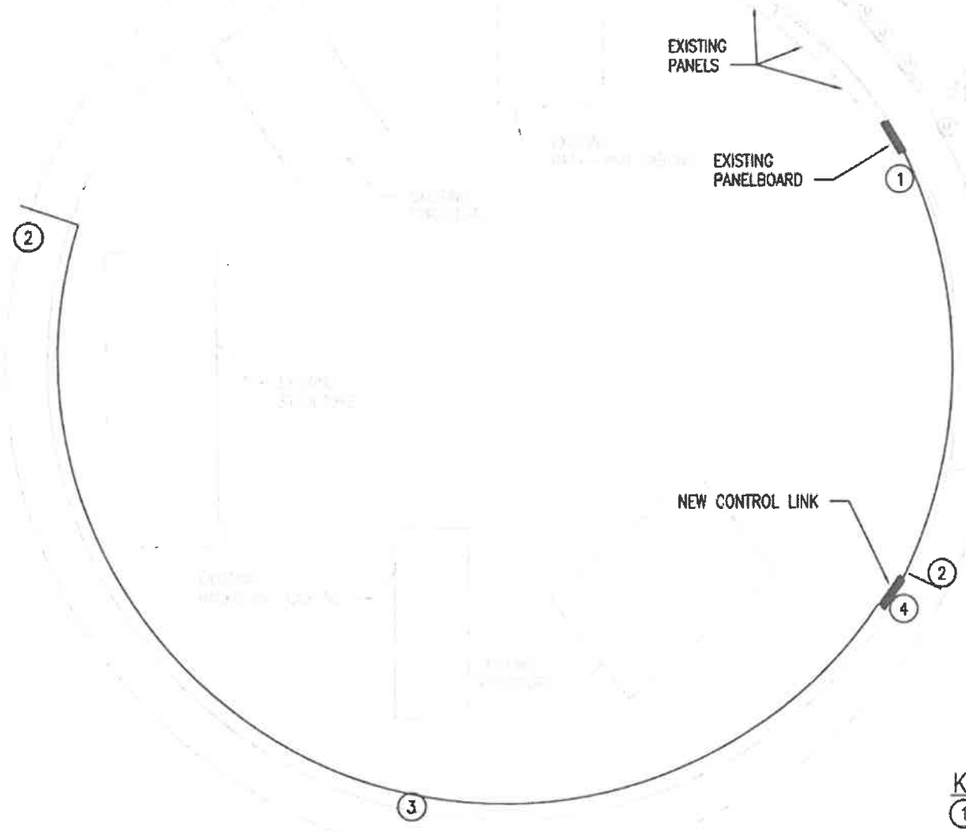

KEYED NOTES:

1. INSTALL 20A 2P BREAKER IN PANELBOARD. INSTALL #10 CONDUCTORS AND #10 GROUND IN 1" CONDUIT TO TIMECLOCK.
2. COORDINATE CORING OF WATERTOWER WITH OWNER. CORING TO BE COMPLETED BY OWNER. STRAP CONDUIT TO TOWER AND FOUNDATION OUTSIDE TO RUN CONDUIT UNDERGROUND.
3. INSTALL CONDUIT ON WALL ON EXISTING STRAPPING ON INTERIOR OF TOWER.
4. ALTERNATE #1 – INSTALL MUSCO CONTROL-LINK SYSTEM TO PROVIDE TIME OF DAY SCHEDULING, DIMMING, AND FIXTURE MONITORING. ALL OTHER EQUAL SYSTEMS WILL NEED TO MEET THESE REQUIREMENTS AND APPROVED BY THE ENGINEER.
   BASE BID TO BE ASTRONOMICAL TIME CLOCK. TIME CLOCK TO BE INTERMATIC ET2805C OR APPROVED EQUAL.

NORTH

ENLARGED TOWER ELECTRICAL FLOOR PLAN

SCALE: 1" = 10'-0"

KCL ENGINEERING

KCL ENGINEERING
300 4th Street
West Des Moines, Iowa 50265
info@kclengineering.com
515.724.7938

NOT FOR CONSTRUCTION

Revisions	Date

Project Number: 19083

Date: 03/27/2020

WEST DES MOINES 50TH STREET WATER TOWER LIGHTING
505 50TH STREET
WEST DES MOINES, IOWA

Sheet Name: ELECTRICAL INTERIOR PLAN

Sheet: E2.0

Datasheet: **80 LED Luminaire**

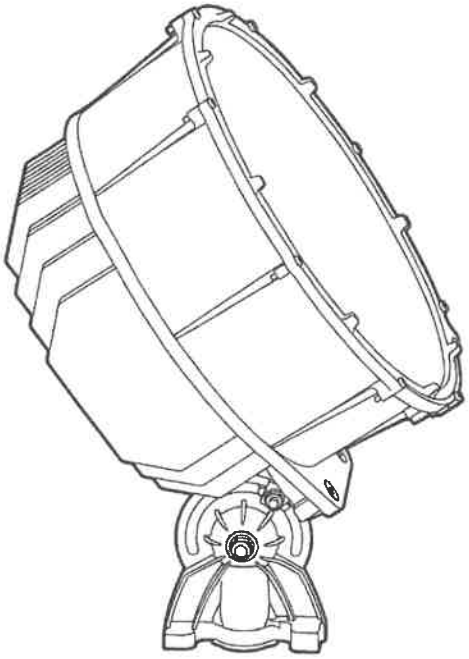

Luminaire Data

Photometric Characteristics

Projected lumen maintenance per IES TM-21-11	
L90 (13.5k)	>81,000 h
L80 (13.5k)	>81,000 h
L70 (13.5k)	>81,000 h
CIE correlated color temperature	4500 K
Color rendering index (CRI)	75 typ, 70 min
Lumens[1]	42,920

Material and Finish

Aluminum, anodized, Castguard™ coated, and powder coated.

Footnotes:

1) Incorporates appropriate dirt depreciation factor for life of luminaire.

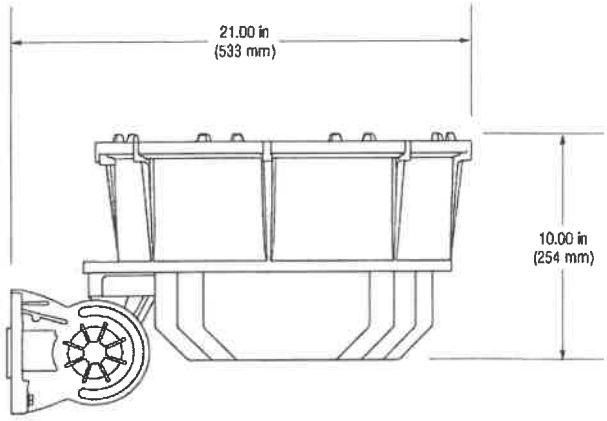

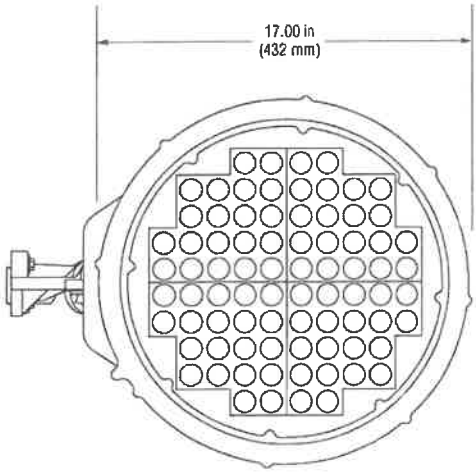

CASTGUARD™ is a trademark of Pioneer Metal Finishing, LLC.
U.S. patents issued • ©2018 Musco Sports Lighting, LLC • 80 LED Model • 4500K 75 CRI • M-2991-en04-1_190104

Driver Data

Electrical Data

Rated wattage[1]	
Per driver	400 W
Per luminaire	400 W
Number of luminaires per driver	1
Starting (inrush) current	4.70 A^2s
Fuse rating	15 A
Ingress protection, electrical components enclosure	IP54
Efficiency	94%

Typical Wiring

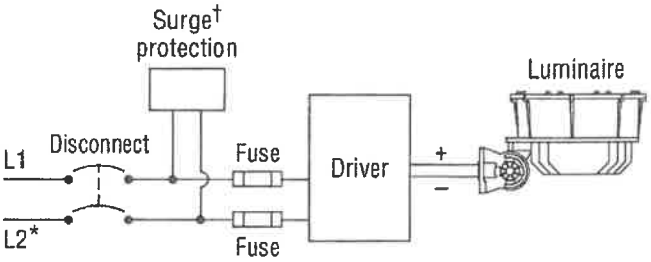

* If L2 (com) is neutral then not switched or fused.
† Not present if indoor installation.

	120 Vac 50/60 Hz	208 Vac 60 Hz	220 Vac 50/60 Hz	230 Vac 50 Hz	240 Vac 50/60 Hz	277 Vac 60 Hz
Max operating current per luminaire[2]	4.13 A	2.38 A	2.25 A	2.16A	2.07 A	1.79 A

Footnotes:

1) Rated wattage is the power consumption, including driver efficiency losses, at stabilized operation in 25°C ambient temperature environment.

2) Operating current includes allowance for 0.90 minimum power factor, operating temperature, and LED light source manufacturing tolerances.

Notes

1. Use thermal magnetic HID-rated or D-curve circuit breakers.

CASTGUARD™ Is a trademark of Pioneer Metal Finishing, LLC.
U.S. patents issued • ©2018 Musco Sports Lighting, LLC • 80 LED Model • 4500K 75 CRI • M-2991-en04-1_190104

ATTACHMENT E

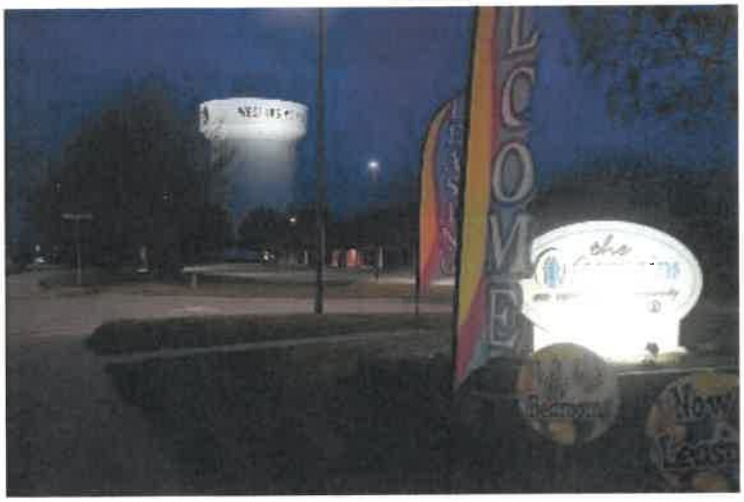

EXHIBIT II

Prepared by: K. Tragesser Development Services PO Box 65320 West Des Moines, IA 50265-0320, 515-222-3620
When Recorded, Return to: City Clerk, City of West Des Moines, P. O. Box 65320, West Des Moines, IA 50265-0320

RESOLUTION

A RESOLUTION OF THE CITY COUNCIL OF THE CITY OF WEST DES MOINES, APPROVING THE MINOR MODFICATION TO A SITE PLAN TO INSTALL LIGHTING FOR THE WATER TOWER AT 505 S. 50TH STREET

WHEREAS, pursuant to the provisions of Title 9, Zoning, Chapter 1 et seq, of the West Des Moines Municipal Code, the applicant, West Des Moines Water Works, in conjunction with the property owner, City of West Des Moines has requested approval to install lighting on the property to illuminate the logo and name of the City on the bowl of the water tower at 505 S. 50TH Street);

Legal Description of Property

The following tract of land in the Northeast Quarter and Southeast Quarter of Section 18, Township 78 North, Range 25 West of the 5th P.M. in the City of West Des Moines, more particularly described as follows: Commencing at the East 1/4 Corner of said Section 18, with the East line of the Southeast 1/4 of said Section 18 having an assumed true bearing of S 0°00'00"E, with all subsequent bearings referenced therefrom; thence S 0°00'00" E, a distance of four hundred thirty-nine and sixty-nine hundredths (439.69) feet; thence N 90°00'00"W, a distance of thirty-three (33.00) feet to a point on the West right-of-way line of 50th Street in the said City of West Des Moines and the point of beginning; thence N 90°00'00" W, a distance of three hundred forty and thirty hundredths (340.30) feet; thence N 27°25'15" W, a distance of two hundred eighty-seven and eight hundredths (287.08) feet to the Southerly line of a power line easement, one hundred (100) feet in width; thence N 62°34'45" E, along said Southerly line of said power line easement, a distance of five hundred thirty-two and thirty-nine hundredths (532.39) feet to the West right-of-way line of said 50th Street; thence S 0°01'51" W, along the said West right-of-way line of 50th Street, a distance of sixty and thirty-one hundredths (60.31) feet; thence S 0°00'00" E, along said West right-of-way line of 50th Street, a distance of four hundred thirty-nine and sixty-nine hundredths (439.69) feet to the point of beginning.
(Also being part of Lot 3 Partition Plat)

WHEREAS, studies and investigations were made and staff reports and recommendations were submitted which are made a part of this record and herein incorporated by reference; and

WHEREAS, on April 13, 2020, the Plan and Zoning Commission did recommend to the City Council approval of the Minor Modification Level 1 (MMI1-004686-2020); and

WHEREAS, on, April 20, 2020, this City Council held a duly-noticed Meetingto consider the application for a Minor Modification Level 1.

NOW, THEREFORE, THE CITY COUNCIL OF THE CITY OF WEST DES MOINES DOES RESOLVE AS FOLLOWS:

SECTION 1. The findings, for approval, stated in the staff report, dated April 20, 2020, or as amended orally at the City Council meeting of April 20, 2020, are adopted.

SECTION 2. The Minor Modification Level 1 (MML1-004686-2020) to allow the installation of lighting to illuminate the bowl of the water tower is approved, subject to compliance with all the conditions in the staff report, dated April 20, 2020, including conditions added at the meeting, and attached hereto as Exhibit "A". Violation of any such conditions shall be grounds for revocation of the entitlement, as well as any other remedy which is available to the City.

PASSED AND ADOPTED on April 20, 2020.

_____
Steven K. Gaer
Mayor

ATTEST:

_____
Ryan Jacobson
City Clerk

I HEREBY CERTIFY that the foregoing resolution was duly adopted by the City Council of the City of West Des Moines, Iowa, at a regular meeting held on April 20, 2020, by the following vote:

ATTEST:

_____
Ryan Jacobson
City Clerk

Exhibit A
Conditions of Approval

None