CITY OF WEST DES MOINES
CITY COUNCIL MEETING COMMUNICATION

Date: May 4, 2020

ITEM Dave & Buster's, 170 S. Jordan Creek Parkway – Approve Preliminary Plat to subdivide property into one commercial lot and Approve Site Plan to construct a building pad for a 22,600 square foot Dave & Buster's Building – Brookfield Properties Retail – PP-004654-2020/SP-004660-2020

RESOLUTION: Approval of Preliminary Plat and Site Plan

FINANCIAL IMPACT: Undetermined.

BACKGROUND: The applicant, Brookfield Properties Retail, on behalf of the owner, Jordan Creek Town Center, LLC, requests approval of a preliminary plat to subdivide property on the Jordan Creek Town Center site to create an approximately 37,000 square foot commercial lot for the development of a Dave & Buster's entertainment facility. This lot will be located on the east side of the Jordan Creek Town Center pond, north of the Residence Inn hotel. The proposed lot will be leased by Dave & Buster's. Also requested is approval of a site plan to allow construction of a building pad for a 22,600 square foot building along with parking lot modifications and landscaping within the parking lot. Brookfield will only be undertaking the site work; Dave & Buster's will be overseeing the actual building design and construction. Details on the architecture and site landscaping and foundation plantings will be part of a subsequent site plan. Pursuant to the provision established for approval of site plans within the Jordan Creek Town Center, staff will send information on the subsequent site plan to the Plan and Zoning Commission and City Council for their review. If two or more reviewers have concerns, the architecture site plan will be presented at a regular Commission and Council meeting. If no concerns are expressed, staff has authority to approve the site plan.

Plan and Zoning Commission Action:
Vote: 7-0 approval
Date: April 27, 2020
Motion: Adopt a resolution recommending the City Council approve the Preliminary Plat and Site Plan Requests

OUTSTANDING ISSUES: There are no outstanding issues. The applicant has stated that they are in agreement with all of staff's recommendations and conditions. The following items of interest are noted in the attached Plan and Zoning Commission report (see Exhibit I):

- Applicant's Request
- History
- City Council Subcommittee - *Development & Planning, April 6, 2020*
- Staff Review and Comments
  - *Building Elevations*
  - *Grease Interceptors*
- Comprehensive Plan Consistency
- Findings
- Staff Recommendation and Conditions of Approval
- Owner/Applicant Representative Information

RECOMMENDATION: Based upon the preceding review and a finding of consistency with the goals and policies of the Comprehensive Plan, the Plan and Zoning Commission recommends the City Council approve the Preliminary Plat to subdivide the property into one lot for commercial development and approve the Site Plan to allow construction of a building pad for the future construction of a 22,600 square foot entertainment facility along with parking lot modifications and landscaping, subject to the applicant meeting all City Code requirements and the following:

1. This approval only allows for issuance of a building permit for footings and foundation and private utilities. No above ground building construction is permitted on the site until the building elevations and foundation landscaping are approved by the City.

2. Grease interceptor locations and connections are not approved with this review. The grease interceptor locations and connections will be reviewed with the building elevations and foundation landscaping review.

Lead Staff Member: Brian Portz, AICP

Staff Reviews:

Department Director	
Appropriations/Finance	
Legal	JDS
Agenda Acceptance	

PUBLICATION(S) (if applicable)

Published In		
Date(s) Published	n/a	
Letter sent to surrounding property owners		

SUBCOMMITTEE REVIEW (if applicable)

Committee	Development & Planning		
Date Reviewed	April 6, 2020		
Recommendation	Yes ☒	No ☐	Split ☐

ATTACHMENTS:

Exhibit I - Plan and Zoning Commission Communication
- Attachment A - Commission Resolution
  - Exhibit A - Conditions of Approval
- Attachment B - Location Map
- Attachment C - Preliminary Plat (For illustrative purposes only – Approved plans in file)
- Attachment D - Site Plans (For illustrative purposes only – Approved plans in file)

Exhibit II - City Council Resolution
- Exhibit A - Conditions of Approval

EXHIBIT I

CITY OF WEST DES MOINES
PLAN AND ZONING COMMISSION COMMUNICATION

Meeting Date: April 27, 2020

Item: Dave & Buster's, 170 S. Jordan Creek Parkway – Approve Preliminary Plat to subdivide property into one commercial lot and Approve Site Plan to construct a building pad for a 22,600 square foot Dave & Buster's Building – Brookfield Properties Retail – PP-004654-2020/SP-004660-2020

Requested Action: Recommend Approval of a Preliminary Plat and Approval of a Site Plan

Case Advisor: Brian Portz, AICP

Applicant's Request: The property owner, Brookfield Properties Retail, requests approval of a preliminary plat to subdivide property on the Jordan Creek Town Center site to create an approximately 37,000 square foot commercial lot for the development of a Dave & Buster's entertainment facility. The proposed lot will be leased by Dave & Buster's. Also requested is approval of a site plan to construct a building pad for a 22,600 square foot building along with parking lot modifications and landscaping within the parking lot. This lot will be located on the east side of the Jordan Creek Town Center pond, north of the Residence Inn hotel. Brookfield will only be undertaking the site work; Dave & Buster's will be overseeing the actual building design and construction.

History: The property to be subdivided is located within the parking lot of the Jordan Creek Town Center, east of the pond on the property. This property was originally platted in 2003 as the Jordan Creek Town Center Plat 1. Construction on the Jordan Creek Town Center site began in 2002.

City Council Subcommittee: This item was presented to the Development & Planning City Council Subcommittee at their April 6, 2020 meeting, as an informational item only. No discussion was had and no disagreement with the proposal was expressed.

Staff Review and Comment: This request was distributed to other City departments and other agencies for their review and comment. There are no outstanding issues. Staff would summarize the following key points of interest:

- *Building Elevations:* Dave & Buster's will be coming forward at a later date for review of the building elevation and landscaping around the building. This review will be completed by staff and since this property is located within the Jordan Creek Town Center, the building elevations and building foundation landscaping can be approved administratively by staff as long as all City Code requirements are met. A condition of approval is recommended that this approval only allows for issuance of a building permit for footings and foundation and private utilities, pending submittal, review and approval of the building elevations and landscaping around the building.

- *Grease Interceptors:* Grease interceptors are noted on the site plan as "by tenant." The grease interceptor location and connections are the responsibility of Dave & Buster's and will be reviewed as a part of the Dave & Buster's submittal that is forthcoming. The property owner will be installing a 6" sanitary service from the existing main to the building

pad. A condition of approval is recommended that the grease interceptor locations and connections be reviewed with the Dave & Buster's submittal.

Comprehensive Plan Consistency: The project has been reviewed for consistency with the Comprehensive Plan. Based upon that review, a finding has been made that the proposed project is consistent with the Comprehensive Plan in that the project is consistent with all of the goals and policies of the Comprehensive Plan and the land use map of the Comprehensive Plan.

Findings: This proposed project was distributed to various city departments for review and comment. Based upon that review, the following findings have been made on the proposed project:

1. The proposed development and use is consistent with the West Des Moines Comprehensive Plan in that the project has been reviewed for consistency with the Comprehensive Plan. Based upon that review, a finding has been made that the proposed project is consistent with the Comprehensive Plan in that the project is consistent with all of the goals and policies of the Comprehensive Plan.

2. The proposed development and use does assure compatibility of property uses within the zone and general area in that this project was reviewed by various City Departments for compliance with the Zoning Ordinance.

3. All applicable standards and conditions have been imposed which protects the public health, safety and welfare in that this project was reviewed by various City Departments and public agencies for compliance with the various state and local regulations. Based upon that review a finding is made that the project has been adequately conditioned to protect the health, welfare and safety of the community.

4. There is adequate on-site and off-site public infrastructure to support the proposed development in that this project was reviewed by various public agencies and City Departments and public utilities to ensure that either the petitioner will construct or the project has been conditioned to construct adequate public infrastructure to serve the development.

5. The proposed development and use has met the requirements contained in the City Code in that this project was reviewed by various City Departments and the project has complied with or has been conditioned to comply with all City Code requirements.

6. The proposed development and use is in keeping with the scale and nature of the surrounding neighborhood in that the proposed project is consistent with the zoning designation and Comprehensive Plan which designates this site as suitable for development such as that proposed by this project.

Staff Recommendation and Conditions of Approval: Based upon the preceding review and a finding of consistency with the goals and policies of the Comprehensive Plan, staff recommends the Plan and Zoning Commission adopt a resolution recommending the City Council approve the Preliminary Plat to subdivide the property into one lot for commercial development and approve a site plan to allow construction of a building pad for the future construction of a 22,600 square foot entertainment facility along with parking lot modifications and landscaping, subject to the applicant meeting all City Code requirements and the following:

1. This approval only allows for issuance of a building permit for footings and foundation and private utilities. No above ground building construction is permitted on the site until the building elevations and foundation landscaping are approved by the City.

2. Grease interceptor locations and connections are not approved with this review. The grease interceptor locations and connections will be reviewed with the building elevations and foundation landscaping review.

Property Owner: Jordan Creek Town Center, LLC (aka Brookfield Properties Retail)
350 N. Orleans Street, Suite 350
Chicago, IL 60654
James.varsamis@brookfieldpropertiesretail.com

Applicant's Representatives:
Shive Hattery
4125 Westown Parkway, Suite 100
West Des Moines, IA 50266
kscallon@shive-hattery.com

ATTACHMENTS:

Attachment A - Plan and Zoning Commission Resolution
Exhibit A - Conditions of Approval
Attachment B - Location Map
Attachment C - Preliminary Plat
Attachment D - Site Plans

RESOLUTION NO. PZC-20-015

A RESOLUTION OF THE PLAN AND ZONING COMMISSION OF THE CITY OF WEST DES MOINES, IOWA, RECOMMENDING TO THE CITY COUNCIL THAT IT APPROVE THE DAVE & BUSTER'S PRELIMINARY PLAT (PP-004654-2020) AND SITE PLAN FOR THAT PROPERTY LOCATED AT 170 S. JORDAN CREEK PARKWAY

WHEREAS, pursuant to the provisions of Title 9, Chapter 1 et seq, of the West Des Moines Municipal Code, the property owner, Brookfield Properties Retail, has requested approval of a Preliminary Plat to subdivide the property into one lot for commercial development and approval of a site plan to allow installation of utilities and construction of a building pad for the future construction of a 22,600 square foot entertainment facility along with parking lot modifications and landscaping for that property located at 170 S. Jordan Creek Parkway; and

WHEREAS, studies and investigations were made, and staff reports and recommendations were submitted which is made a part of this record and herein incorporated by reference; and

WHEREAS, on April 27, 2020, this Commission held a duly-noticed meeting to consider the Dave & Buster's Preliminary Plat (PP-004654-2020) and Site Plan (SP-004660-2020).

NOW, THEREFORE, THE PLAN AND ZONING COMMISSION OF THE CITY OF WEST DES MOINES DOES RESOLVE AS FOLLOWS:

SECTION 1. The findings, for approval, in the staff report, dated April 27, 2020, or as amended orally at the Plan and Zoning Commission hearing of April 27, 2020, are adopted.

SECTION 2. PRELIMINARY PLAT (PP-004654-2020) and SITE PLAN (SP-004660-2020) to subdivide the property into one lot for commercial development and approval of a site plan to allow installation of private utilities, construction of a building pad and parking lot modifications and landscaping is recommended to the City Council for approval, subject to compliance with all the conditions in the staff report, dated April 27, 2020, including conditions added at the meeting, and attached hereto as Exhibit "A". Violation of any such conditions shall be grounds for revocation of the permit, as well as any other remedy which is available to the City.

PASSED AND ADOPTED on April 27, 2020.

Erica Andersen

Erica Andersen, Chair
Plan and Zoning Commission

ATTEST: Jennifer Canaday

Recording Secretary

I HEREBY CERTIFY that the foregoing resolution was duly adopted by the Plan and Zoning Commission of the City of West Des Moines, Iowa, at a regular meeting held on April 27, 2020, by the following vote:

AYES: Andersen, Conlin, Costa, Crowley, Drake, Hatfield, Southworth
NAYS:
ABSTENTIONS:
ABSENT:

ATTEST:

Jennifer Canaday

Recording Secretary

Exhibit A
Conditions of Approval

1. This approval only allows for issuance of a building permit for footings and foundation and private utilities. No above ground building construction is permitted on the site until the building elevations and foundation landscaping are approved by the City.

2. Grease interceptor locations and connections are not approved with this review. The grease interceptor locations and connections will be reviewed with the building elevations and foundation landscaping review.

Dave & Buster's

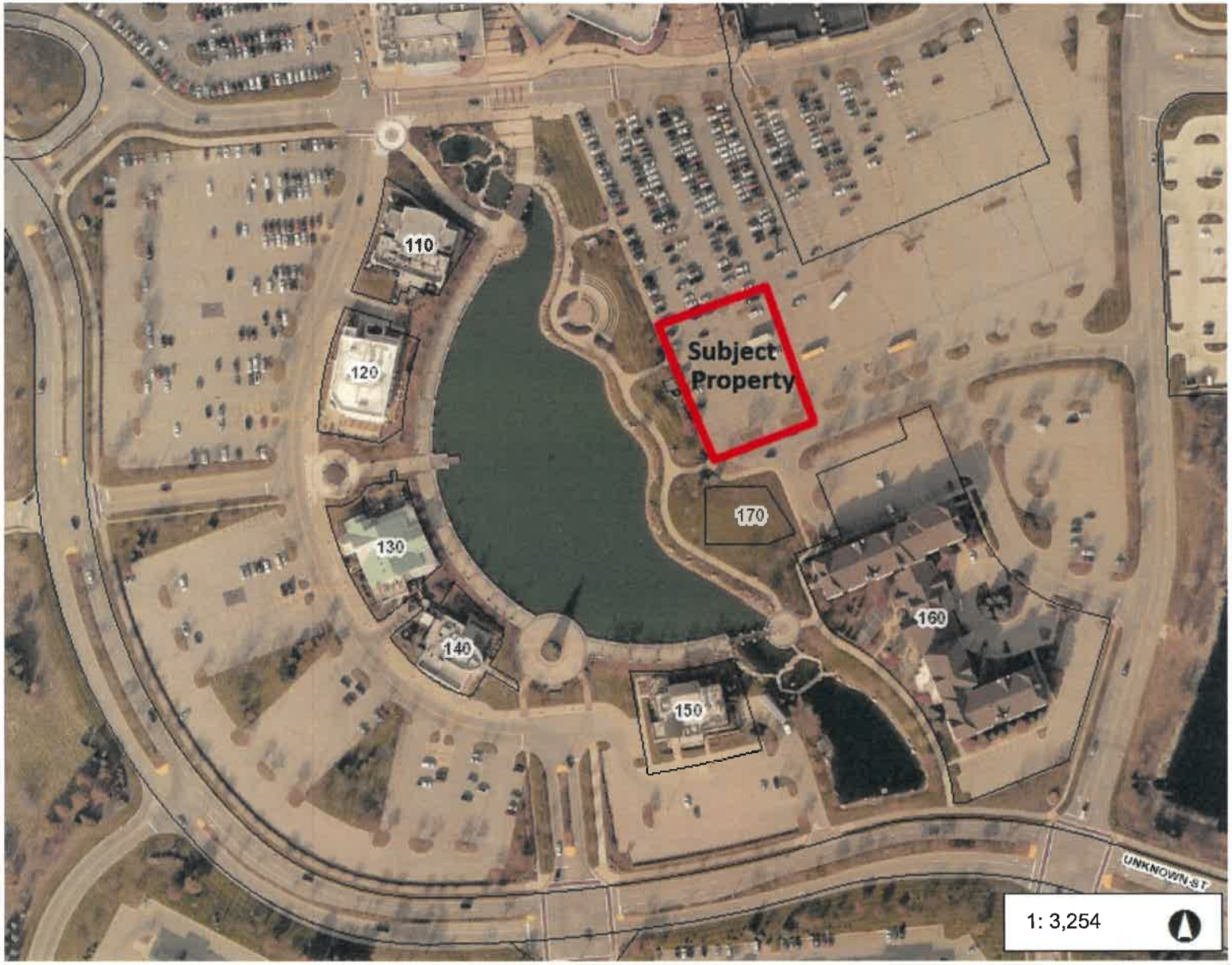

Legend

- Addresses
- Corporate Limits
- Parcels

542.3 0 271.14 542.3 Feet

WGS_1984_Web_Mercator_Auxiliary_Sphere

© City of West Des Moines, Iowa

Disclaimer: The City of West Des Moines makes no warranties regarding the accuracy or completeness of the data provided herein.

THIS MAP IS NOT TO BE USED FOR NAVIGATION

ATTACHMENT B

ATTACHMENT C

PRELIMINARY PLAT OF LOT 18
JORDAN CREEK TOWN CENTER REPLAT 1

BROOKFIELD PROPERTIES RETAIL
101 JORDAN CREEK PKWY, WEST DES MOINES, IA 50266

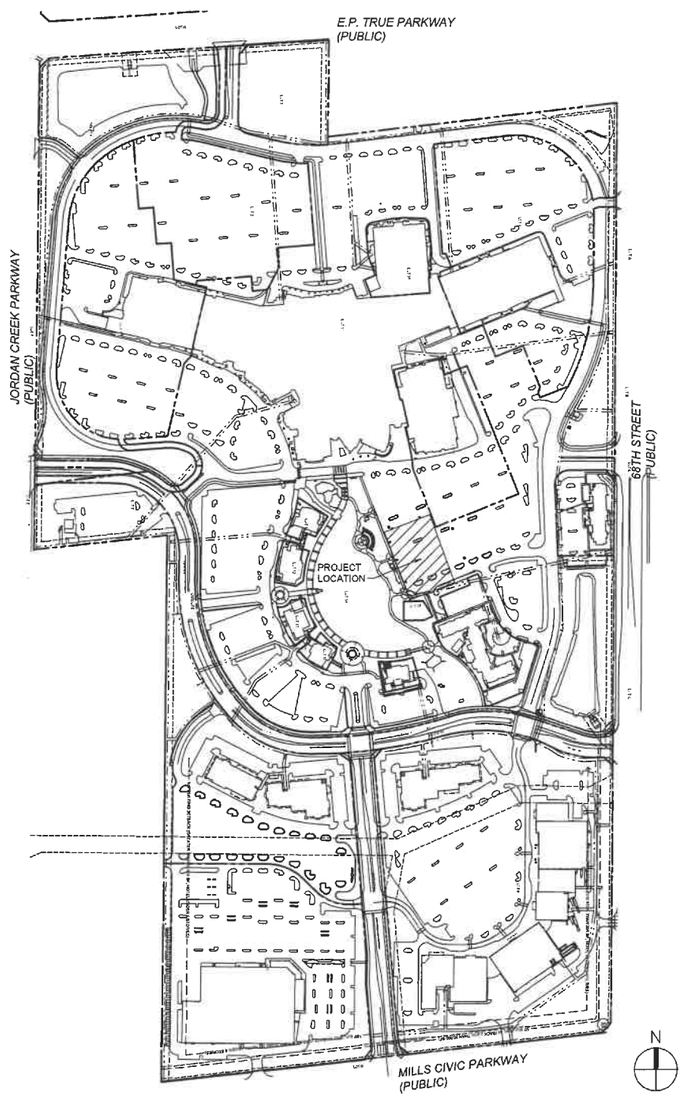

GENERAL NOTES

1. THE LOCATIONS OF UTILITY MAINS, STRUCTURES AND SERVICE CONNECTIONS PLOTTED ON THIS DRAWING ARE APPROXIMATE ONLY AND WERE OBTAINED FROM RECORDS MADE AVAILABLE TO SHIVE-HATTERY, INC. THERE MAY BE OTHER EXISTING UTILITY MAINS, STRUCTURES AND SERVICE CONNECTIONS NOT KNOWN TO SHIVE-HATTERY, INC. AND NOT SHOWN ON THIS DRAWING. THE VERIFICATION OF EXISTENCE OF, AND THE DETERMINATION OF THE EXACT LOCATION OF, UTILITY MAINS, STRUCTURES AND SERVICE CONNECTIONS SHALL BE THE RESPONSIBILITY OF THE CONSTRUCTION CONTRACTOR(S).
2. NOTIFY UTILITY COMPANIES WHOSE FACILITIES ARE SHOWN ON THE PLANS OR KNOWN TO BE WITHIN CONSTRUCTION LIMITS OF THE SCHEDULE PRIOR TO EACH STAGE OF CONSTRUCTION.
3. PRIOR TO CONSTRUCTION, THE CONTRACTOR SHALL UNCOVER EXISTING UTILITIES AT CRITICAL LOCATIONS TO VERIFY EXACT HORIZONTAL AND VERTICAL LOCATION.
4. IOWA CODE 480, UNDERGROUND FACILITIES INFORMATION, REQUIRES VERBAL NOTICE TO IOWA ONE-CALL 1-800-292-8989, NOT LESS THAN 48 HOURS BEFORE EXCAVATING, EXCLUDING WEEKENDS AND HOLIDAYS.
5. THE MEANS OF THE WORK AND THE SAFETY OF THE CONTRACTOR'S EMPLOYEES ARE SOLELY THE RESPONSIBILITY OF THE CONTRACTOR.
6. NO WORK SHALL BE PERFORMED BEYOND THE PROJECT LIMITS WITHOUT PRIOR AUTHORIZATION FROM THE OWNER'S REPRESENTATIVE.
7. PROTECT EXISTING UTILITIES DURING CONSTRUCTION.
8. MAINTAIN POSITIVE DRAINAGE ON THE SITE THROUGHOUT THE PROJECT DURATION.
9. SITE CLEAN-UP SHALL BE PERFORMED ON A DAILY BASIS. SIDEWALKS, PARKING LOTS, ROADWAYS, ETC. SHALL BE KEPT CLEAN AT ALL TIMES.
10. ALL OPEN EXCAVATIONS SHALL BE PROTECTED.
11. REPLACE ANY PROPERTY MONUMENTS REMOVED OR DESTROYED BY CONSTRUCTION. MONUMENTS SHALL BE SET BY A LAND SURVEYOR REGISTERED TO PRACTICE IN THE STATE OF IOWA.
12. CONTROL DUST SPREADING FROM ALL WORK AND STAGING AREAS.
13. ANY WORK REQUIRED TO COMPLETE THE SCOPE OF THIS PROJECT BUT NOT SPECIFICALLY CALLED OUT, SHALL BE CONSIDERED INCIDENTAL TO THE PROJECT. NO ADDITIONAL COMPENSATION SHALL BE ALLOWED FOR THE COMPLETION OF THIS WORK.
14. REPAIR OR REPLACE EXISTING FACILITIES (CURBS, PAVEMENT, PAVEMENT MARKINGS, UTILITIES, ETC.) TO REMAIN, AT NO ADDITIONAL EXPENSE TO THE OWNER.
15. WORK WHICH DOES NOT CONFORM TO THE REQUIREMENTS OF THE CONTRACT WILL BE CONSIDERED UNACCEPTABLE. UNACCEPTABLE WORK, WHETHER THE RESULT OF POOR WORKMANSHIP, USE OF DEFECTIVE MATERIALS, DAMAGE THROUGH CARELESSNESS OR ANY OTHER CAUSE, FOUND TO EXIST PRIOR TO THE FINAL ACCEPTANCE OF THE WORK, SHALL BE REMOVED AND REPLACED IN AN ACCEPTABLE MANNER, AS REQUIRED BY OWNER'S REPRESENTATIVE AT THE CONTRACTOR'S EXPENSE. WORK DONE CONTRARY TO THE INSTRUCTIONS OF THE OWNER'S REPRESENTATIVE, WORK DONE BEYOND THE LINES SHOWN ON THE PLANS OR ANY EXTRA WORK DONE WITHOUT PRIOR AUTHORIZATION.
16. ALL SLOPES IN PAVEMENT SHALL BE UNIFORM TO AVOID PONDING.
17. ALL DIMENSIONS TO BACK-OF-CURB UNLESS NOTED OTHERWISE.
18. EROSION CONTROL MEASURES SHALL BE PROVIDED AND MAINTAINED THROUGHOUT CONSTRUCTION TO MEET REQUIREMENTS OF ALL REGULATORY AGENCIES.
19. CONTRACTOR TO COORDINATE ANY GRADE ADJUSTMENTS WITH THE DESIGN ENGINEER PRIOR TO PROCEEDING WITH THE WORK.
20. THE GENERAL CONTRACTOR SHALL BE RESPONSIBLE FOR THE COORDINATION OF WORK OF ALL SUBCONTRACTOR(S) INVOLVED IN THE PROJECT.
21. CONTRACTOR IS RESPONSIBLE FOR COORDINATING ACCESS TO ADJACENT PROPERTIES THROUGHOUT CONSTRUCTION. ANY WORK ON A PUBLIC STREET OR ALLEY THAT REQUIRES CLOSURE WILL REQUIRE A CLOSURE NOTICE SUBMITTED TO WEST DES MOINES PUBLIC WORKS 48 HOURS IN ADVANCE.
22. ALL EXISTING UTILITY STRUCTURES SHALL BE ADJUSTED TO FINAL FINISH GRADES.
23. ALL WATER WORK, PUBLIC OR PRIVATE, SHALL BE DONE IN ACCORDANCE WITH THE WEST DES MOINES WATER WORKS STANDARD SPECIFICATIONS.
24. CONTRACTOR SHALL NOTIFY WEST DES MOINES WATER WORKS AT LEAST ONE WEEK PRIOR TO BUILDING CONSTRUCTION.
25. ALL CONSTRUCTION WITHIN PUBLIC R.O.W. / EASEMENTS, AND/OR ANY CONNECTION TO PUBLIC SEWERS AND STREETS, SHALL COMPLY WITH THE WEST DES MOINES STANDARD CONSTRUCTION SPECIFICATIONS FOR SUBDIVISIONS, DSM METRO DESIGN STANDARDS, AND WDM ADDENDUMS.
26. AT LEAST ONE WEEK PRIOR TO ANY CONSTRUCTION WITHIN PUBLIC R.O.W. / EASEMENTS AND/OR ANY CONNECTION TO PUBLIC SEWER AND STREETS, THE CONTRACTOR SHALL CONTACT THE WDM CONSTRUCTION DIVISION TO OBTAIN APPLICABLE CITY PERMITS THAT MAY BE NECESSARY. IT IS IMPORTANT TO NOTE CITY APPROVAL OF THIS PLAN IS SUBJECT TO THE APPLICANT OBTAINING ALL NECESSARY EASEMENTS / AGREEMENTS AND APPLICABLE PERMITS.
27. STRIP TOPSOIL AND SOD FROM ALL AREAS WHICH ARE TO BE FILLED OR CUT. RESPREAD TOPSOIL AND BACKFILL TO TOP OF CURB OR EDGE OF PAVEMENT. COMPACT BACKFILL TO PREVENT SETTLING.
28. IT SHALL BE THE CONTRACTORS RESPONSIBILITY TO PROVIDE WASTE AREAS OR DISPOSAL SITES FOR EXCESS MATERIAL WHICH IS NOT DESIRABLE TO BE INCORPORATED IN THE WORK INVOLVED IN THIS PROJECT - EXCAVATION, BROKEN CONCRETE, ETC. NO PAYMENT SHALL BE ALLOWED FOR MATERIAL HAULED TO THESE SITES.
29. ALL LIGHTS ARE TO BE DOWNCAST CUTOFF VARIETY. WALL PACKS ARE PROHIBITED. THE MAXIMUM ILLUMINATION ALLOWED AT THE PROPERTY LINE IS 1 FOOT-CANDLE.
30. ANY NEW ROOFTOP MECHANICAL EQUIPMENT MUST BE SCREENED FROM STREET LEVEL VIEW.
31. CONTACT BUILDING INSPECTION (515-222-3630) A MINIMUM OF 24 HOURS IN ADVANCE FOR PRIVATE UTILITY INSTALLATION INSPECTIONS
32. DESIGNATED BUFFERS SHALL BE LABELED AS A "NO BUILD AREA".
33. ALL SIGNING, PAVEMENTS MARKINGS, AND OTHER TRAFFIC CONTROL DEVICES ON ALL STREETS (PRIVATE AND PUBLIC) SHALL CONFORM TO THE MANUAL ON UNIFORM TRAFFIC CONTROL DEVICES (MUTCD)

PROPERTY OWNER/APPLICANT

BROOKFIELD PROPERTIES RETAIL
ATTN: JAMES VARSAMIS
350 N. ORLEANS ST, STE 300
CHICAGO, IL 60654
PHONE: 312-960-5544

ENGINEER

SHIVE-HATTERY, INC.
ATTN: KELSEY SCALLON
4125 WESTOWN PARKWAY
WEST DES MOINES, IA 50266
PHONE: 515-223-8104

LAND AREA

LOT 19 - 37,375 SF (0.858 AC)

LEGAL DESCRIPTION

PROPOSED LOT 19 JORDAN CREEK TOWN CENTER PLAT 1 - REPLAT 1

COMPREHENSIVE LAND USE

EXISTING: TOWN CENTER COMMERCIAL

PROPOSED: TOWN CENTER COMMERCIAL

ZONING

EXISTING: JORDAN CREEK TOWN CENTER PUD

PROPOSED: JORDAN CREEK TOWN CENTER PUD

FLOOD PLAIN NOTE

ACCORDING TO THE FLOOD INSURANCE RATE MAP - PANEL NUMBERS 1902310310F, PUBLISHED BY THE FEDERAL EMERGENCY MANAGEMENT AGENCY AND WITH AN EFFECTIVE DATE OF FEBRUARY 1, 2019, THIS SITE APPEARS TO BE LOCATED IN ZONE "X" (AREAS TO BE OUTSIDE 500 YEAR FLOOD PLAIN.), TO THE BEST OF MY KNOWLEDGE AND BELIEF. THE SURVEYOR UTILIZED THE ABOVE REFERENCED FLOODPLAIN PANEL FOR THIS DETERMINATION; FURTHERMORE, THE SURVEYOR DOES NOT CERTIFY THAT REVISED FLOODPLAIN INFORMATION HAS NOT BEEN PUBLISHED BY THE FEDERAL EMERGENCY MANAGEMENT AGENCY OR SOME OTHER SOURCE.

BENCHMARKS

WDM BENCHMARK #35 - INTERSECTION OF MILLS CIVIC PARKWAY (335TH STREET, DALLAS COUNTY) AND SOUTH 88TH STREET (X AVENUE, DALLAS COUNTY), NORTHEAST CORNER OF INTERSECTION, 206 FEET EAST OF CENTERLINE OF SOUTH 88TH STREET, 49 FEET NORTH OF THE CENTERLINE OF MILLS CIVIC PARKWAY, 2 FEET SOUTH OF THE FENCE LINE. STANDARD BENCHMARK

ELEVATION = 219.04 CITY DATUM (993.05 NAVD88)

WDM BENCHMARK #124 - INTERSECTION OF JORDAN CREEK PARKWAY AND MILLS CIVIC PARKWAY, 169 ± FEET EAST OF THE WEST END OF MEDIAN, IN THE CENTER OF 6 FEET GRASS MEDIAN IN MILLS CIVIC PARKWAY, 17 ± FEET WEST OF THE ANGLE POINT IN THE CURB FOR THE WESTBOUND TURN LANE. STANDARD BENCHMARK

ELEVATION = 203.65 CITY DATUM (977.66 NAVD88)

ADJACENT LANDOWNERS

LOT 1 - JORDAN CREEK ANCHOR ACQUISITION, LLC
LOT 2-3, 9-17, OUTLOT 4-5 - JORDAN CREEK TOWN CENTER, LLC
LOT 4 - THE HIGBEE COMPANY
LOT 5 - WIM-WDM INVESTORS, LLC

IMPERVIOUS AREA CALCULATIONS

LOT 18:
5,860 SF IMPERVIOUS AREA REMOVED

PROPOSED LOT 19:
EXISTING IMPERVIOUS AREA = 36,599 SF
PROPOSED IMPERVIOUS AREA = 30,390 SF
6,209 SF IMPERVIOUS AREA REMOVED

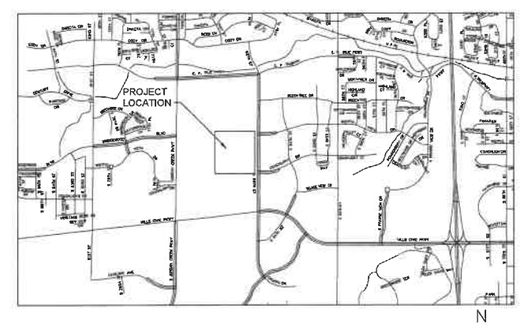

VICINITY MAP

N

CIVIL ENGINEER

I HEREBY CERTIFY THAT THIS ENGINEERING DOCUMENT DESCRIBED BELOW WAS PREPARED BY ME OR UNDER MY DIRECT PERSONAL SUPERVISION AND THAT I AM A DULY LICENSED PROFESSIONAL ENGINEER UNDER THE LAWS OF THE STATE OF IOWA.

Signature: Date:

Printed or typed name: KELSEY A. SCALLON
License Number: 25081
My License Renewal Date is: DECEMBER 31, 2021
PAGES, SHEETS OR DIVISIONS COVERED BY THIS SEAL:
ALL SHEETS

SHIVE-HATTERY
ARCHITECTURE + ENGINEERING
4125 Westown Pkwy, Suite 100 | West Des Moines, Iowa
515.223.8104 | www.shive-hattery.com
Iowa | Illinois | Indiana

PRELIMINARY PLAT OF LOT 18
JORDAN CREEK TOWN CENTER REPLAT 1

BROOKFIELD PROPERTIES RETAIL
101 JORDAN CREEK PKWY, WEST DES MOINES, IA 50266

DRAWN: EDR
APPROVED: KAS
ISSUED FOR: CITY APPROVAL
DATE: 2020-04-22
PROJECT NO: 41B4000
FIELD BOOK: —
CLIENT NO: —

COVER SHEET

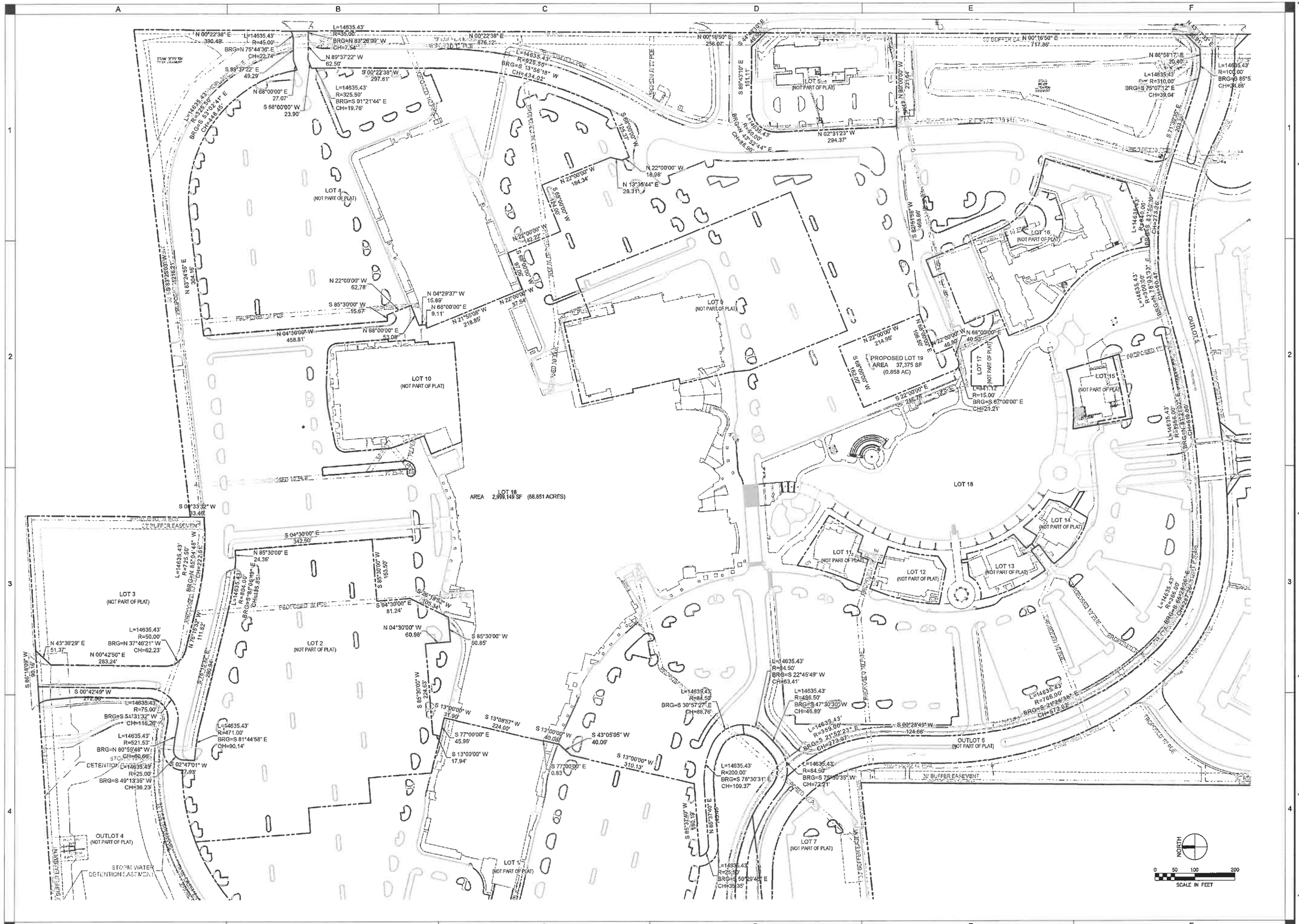

SHIVEHATTERY
ARCHITECTURE + ENGINEERING
4125 Westown Pkwy, Suite 100 | West Des Moines, Iowa 50266
515.223.8104 | www.shive-hattery.com
Iowa | Illinois | Indiana

PRELIMINARY PLAT OF LOT 18
JORDAN CREEK TOWN CENTER REPLAT 1

BROOKFIELD PROPERTIES RETAIL

101 JORDAN CREEK PKWY, WEST DES MOINES, IA 50266

PRELIMINARY PLAT

DRAWN: EDR
APPROVED: KAS
ISSUED FOR: CITY APPROVAL
DATE: 2020-04-22
PROJECT NO: 4194000
FIELD BOOK: —
CLIENT NO:

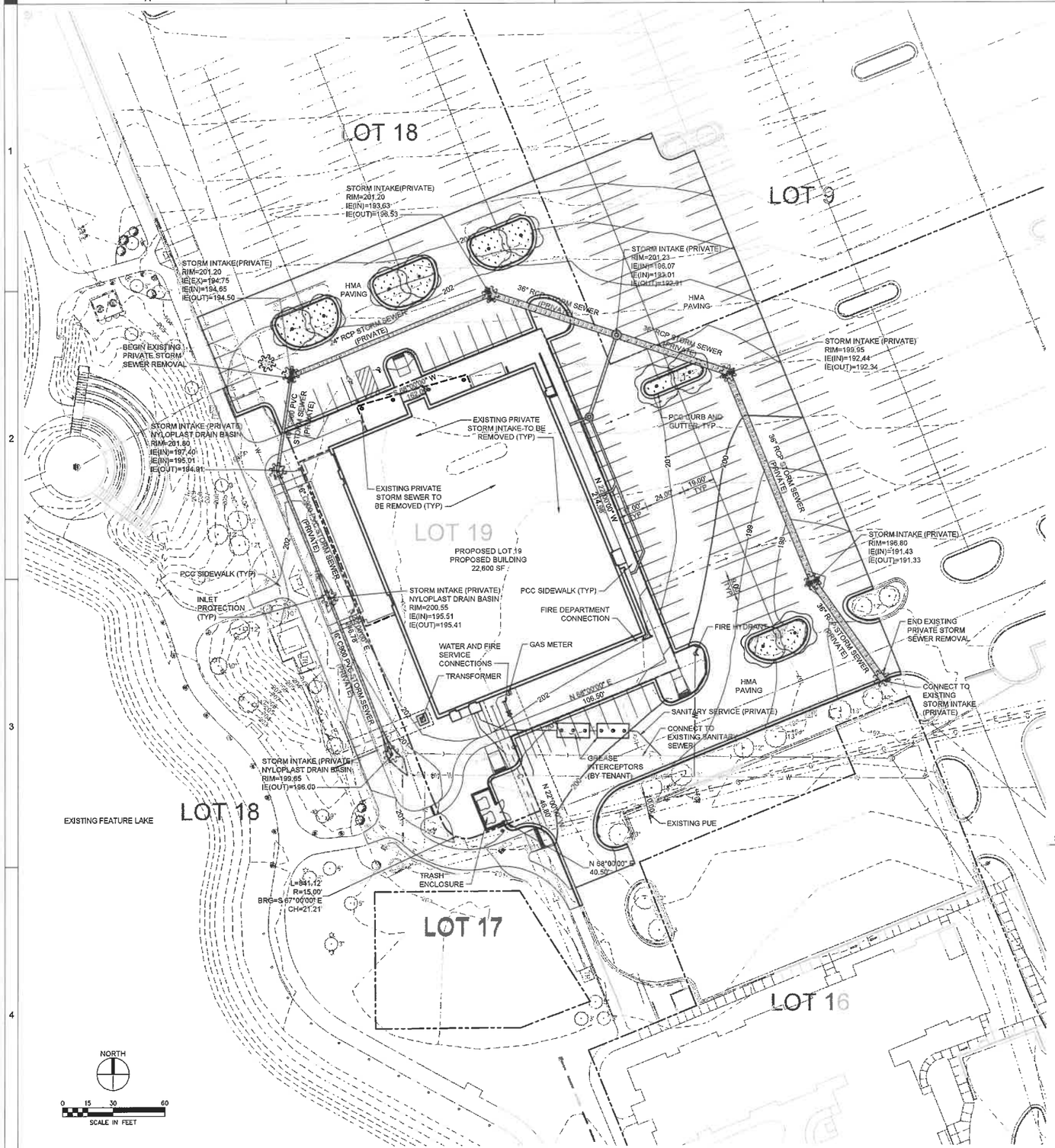

LEGEND

GENERAL SITE

PLAN MARK	DESCRIPTION
	PROPOSED BUILDING
	HANDICAPPED PARKING
	DECIDUOUS TREE
	CONIFEROUS TREE
	SINGLE POLE SIGN
	TREE LINE
621	EXISTING MINOR CONTOUR
620	EXISTING MAJOR CONTOUR
621	PROPOSED MINOR CONTOUR
620	PROPOSED MAJOR CONTOUR
	LIGHT DUTY PAVING
	PCC SIDEWALK PAVING

LEGEND

SURVEY

PLAN MARK	DESCRIPTION
BM	BENCH MARK
	IRON ROD - FOUND
	IRON ROD - SET
	MONUMENT FOUND
	X CUT FOUND

LEGEND

UTILITIES

PLAN MARK	DESCRIPTION
	FIRE HYDRANT
	UTILITY END CAP
	VALVE
C	CABLE TV PEDESTAL
	CLEANOUT
	MANHOLE
	EXISTING STORM MANHOLE
	EXISTING SANITARY MANHOLE
MH	TELEPHONE MANHOLE
T	TELEPHONE PEDESTAL
	VAULT BOX
HH	HANDHOLE
G	GAS METER
E	ELECTRIC METER
	LIGHT POLE
	TRANSFORMER
W	WATER METER
	EXISTING CURB INLET
	EXISTING INTAKE - CIRCLE
	PROPOSED INLET

LEGEND

UTILITY LINES

EXISTING LINE TYPE	DESCRIPTION	PROPOSED LINE TYPE
—E—	ELECTRIC - UNDERGROUND	—E—
—G—	GAS MAIN	—G—
—W—	WATER MAIN	—W—
	SANITARY SEWER	
	STORM SEWER	
	SUBDRAIN	
—T—	TELEPHONE - UNDERGROUND	—T—
—C—	CABLE LINE - UNDERGROUND	—C—
—FO—	FIBER OPTICS	—FO—

WATER MAIN QUANTITIES (PRIVATE)

47 LF	8" FIRE PROTECTION SERVICE
13 LF	6" FIRE HYDRANT LEAD
11 LF	4" WATER SERVICE
1 EA	8" 45° BEND
1 EA	4" 90° BEND
1 EA	8"X4" TEE
1 EA	8" VALVE
1 EA	4" VALVE
1 EA	FIRE HYDRANT ASSEMBLY

WATER MAIN NOTES

1. SITE IS SERVED WITH PRIVATE WATER MAIN. PROTECT AT ALL TIMES.

STORM WATER POLLUTION PREVENTION NOTES

1. BEST MANAGEMENT PRACTICES (BMP'S) AND CONTROLS SHALL CONFORM TO FEDERAL, STATE, OR LOCAL REQUIREMENTS OR MANUAL OF PRACTICE, AS APPLICABLE. CONTRACTOR SHALL IMPLEMENT ADDITIONAL CONTROLS AS DIRECTED BY PERMITTING AGENCY OR OWNER.
2. CONTRACTOR SHALL MINIMIZE CLEARING TO THE MAXIMUM EXTENT PRACTICAL.
3. CONTRACTOR SHALL UTILIZE THE SOUTHERN HALF OF SITE FOR THE TEMPORARY PARKING AND STORAGE AREA WHICH SHALL ALSO BE USED AS THE EQUIPMENT MAINTENANCE AND CLEANING AREA, AND AREA FOR LOCATING PORTABLE FACILITIES, OFFICE TRAILERS, AND TOILET FACILITIES.
4. ALL WASH WATER (CONCRETE TRUCKS, VEHICLE CLEANING, EQUIPMENT CLEANING, ETC.) SHALL BE DETAINED AND PROPERLY TREATED OR DISPOSED.
5. SUFFICIENT OIL AND GREASE ABSORBING MATERIALS SHALL BE MAINTAINED ON SITE OR READILY AVAILABLE TO CONTAIN AND CLEAN-UP FUEL OR CHEMICAL SPILLS AND LEAKS.
6. DUST ON THE SITE SHALL BE CONTROLLED. THE USE OF MOTOR OILS AND OTHER PETROLEUM BASED OR TOXIC LIQUIDS FOR DUST SUPPRESSION OPERATIONS IS PROHIBITED.
7. RUBBISH, TRASH, GARBAGE, LITTER, OR OTHER SUCH MATERIALS SHALL BE DEPOSITED INTO SEALED CONTAINERS. MATERIALS SHALL BE PREVENTED FROM LEAVING THE PREMISES THROUGH THE ACTION OF WIND OR STORM WATER DISCHARGE INTO DRAINAGE DITCHES OR WATERS OF THE STATE.
8. DISTURBED PORTIONS OF THE SITE WHERE CONSTRUCTION ACTIVITY HAS PERMANENTLY STOPPED SHALL BE PERMANENTLY SEEDED. THESE AREAS SHALL BE SEEDED NO LATER THAN 14 DAYS AFTER THE LAST CONSTRUCTION ACTIVITY OCCURRING IN THESE AREAS.
9. ALL MATERIALS SPILLED, DROPPED, WASHED, OR TRACKED FROM VEHICLES ONTO ROADWAYS OR INTO STORM DRAINS MUST BE REMOVED IMMEDIATELY.
10. CONTRACTORS OR SUBCONTRACTORS WILL BE RESPONSIBLE FOR REMOVING SEDIMENT THAT MAY HAVE COLLECTED IN THE STORM SEWER DRAINAGE SYSTEMS IN CONJUNCTION WITH THE STABILIZATION OF THE SITE.
11. SLOPES SHALL BE LEFT IN A ROUGHENED CONDITION DURING THE GRADING PHASE TO REDUCE RUNOFF VELOCITIES AND EROSION.
12. THE CONTRACTOR SHALL BE RESPONSIBLE FOR ADJUSTING THE EROSION CONTROL MEASURES (SILT FENCES, WATTLES, INLET PROTECTION, ETC.) TO PREVENT EROSION.
13. ALL STORM SEWER INTAKES THAT RECEIVE STORMWATER RUNOFF FROM DISTURBED AREAS SHALL BE PROVIDED WITH A FILTER SACK. SEE DETAIL.
14. CONTRACTOR SHALL BE RESPONSIBLE FOR INSTALLATION, PERIODIC CHECKING AND REINSTALLATION OF EROSION AND SEDIMENTATION CONTROL MEASURES.
15. OWNER SHALL ASSUME RESPONSIBILITY FOR ALL EROSION CONTROL UNTIL DELEGATED TO CONTRACTOR ONCE THE PROJECT CONSTRUCTION STARTS.
16. THE GENERAL CONTRACTOR SHALL BE RESPONSIBLE FOR COMPLIANCE WITH THE WEST DES MOINES WATER WORKS AND THE CITY'S CROSS CONNECTION CONTROL/CONTAINMENT PROVISION.
17. THE GENERAL CONTRACTOR SHALL BE RESPONSIBLE FOR THE PROPER INSTALLATION OF AN APPROVED BACKFLOW PREVENTION ASSEMBLY(IES) FOR CONTAINMENT IN ALL NEW CONSTRUCTION. BACKFLOW PREVENTION TO BE INSTALLED PER CITY ORDINANCE 1297, 54-1998. CONTRACTOR SHALL NOTIFY WEST DES MOINES WATER WORKS, RALPH RENTERIA, ENGINEERING TECHNICIAN (515-222-3465) A MINIMUM OF 24 HOURS AFTER INSTALLATION AND TESTING OF ALL BACKFLOW DEVICES TO SCHEDULE FINAL INSPECTION.

SHIVEHATTERY
ARCHITECTURE + ENGINEERING
4125 Westown Pkwy, Suite 100 | West Des Moines, Iowa 50266
515.223.8104 | www.shive-hattery.com
Iowa | Illinois | Indiana

PRELIMINARY PLAT OF LOT 18
JORDAN CREEK TOWN CENTER REPLAT 1

BROOKFIELD PROPERTIES RETAIL
101 JORDAN CREEK PKWY, WEST DES MOINES, IA 50266

DRAWN: EDR
APPROVED: KAS
ISSUED FOR: CITY APPROVAL
DATE: 2020-04-22
PROJECT NO: 419/000
FIELD BOOK: —
CLIENT NO:

PRELIMINARY PLAT

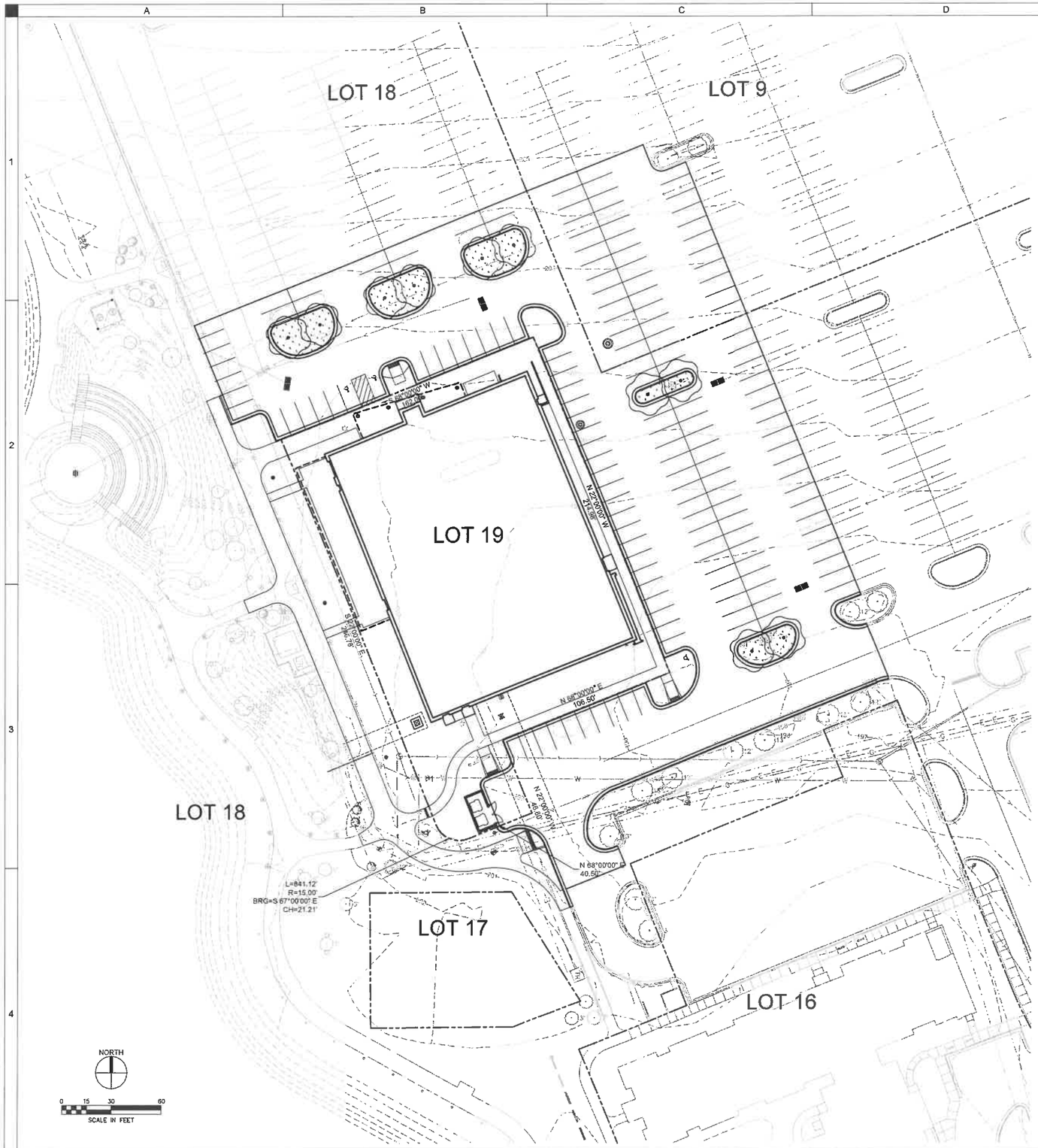

SHIVEHATTERY
ARCHITECTURE + ENGINEERING
4125 Westown Pkwy, Suite 100 | West Des Moines, Iowa 50266
515.223.8104 | www.alliive-battery.com
Iowa | Illinois | Indiana

PRELIMINARY PLAT OF LOT 18
JORDAN CREEK TOWN CENTER REPLAT 1

BROOKFIELD PROPERTIES RETAIL
101 JORDAN CREEK PKWY, WEST DES MOINES, IA 50266

DRAWN: EDR
APPROVED: KAS
ISSUED FOR: CITY APPROVAL
DATE: 2023-04-22
PROJECT NO: 4194000
FIELD BOOK: —
CLIENT NO:

PRELIMINARY PLAT

ATTACHMENT D

DAVE & BUSTER'S
JORDAN CREEK TOWN CENTER

BROOKFIELD PROPERTIES RETAIL
101 JORDAN CREEK PKWY, WEST DES MOINES, IA 50265

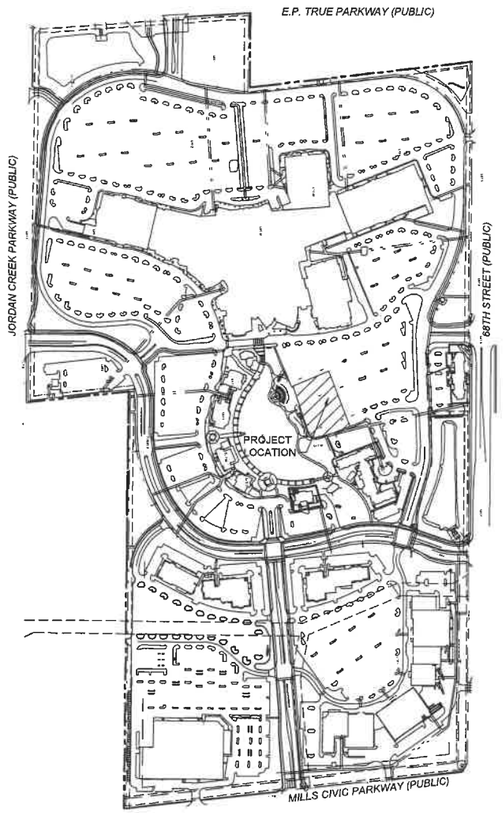

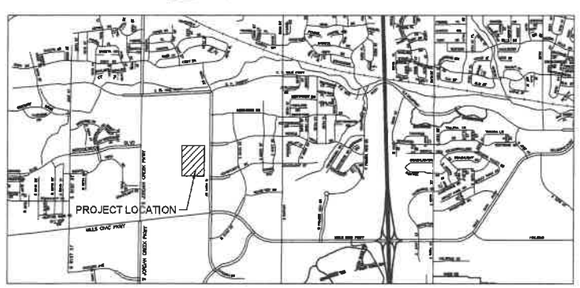

VICINITY MAP

NORTH

GENERAL NOTES

1. THE LOCATIONS OF UTILITY MAINS, STRUCTURES AND SERVICE CONNECTIONS PLOTTED ON THIS DRAWING ARE APPROXIMATE ONLY AND WERE OBTAINED FROM RECORDS MADE AVAILABLE TO SHIVE-HATTERY, INC. THERE MAY BE OTHER EXISTING UTILITY MAINS, STRUCTURES AND SERVICE CONNECTIONS NOT KNOWN TO SHIVE-HATTERY, INC. AND NOT SHOWN ON THIS DRAWING. THE VERIFICATION OF EXISTENCE OF, AND THE DETERMINATION OF THE EXACT LOCATION OF, UTILITY MAINS, STRUCTURES AND SERVICE CONNECTIONS SHALL BE THE RESPONSIBILITY OF THE CONSTRUCTION CONTRACTOR(S).
2. NOTIFY UTILITY COMPANIES WHOSE FACILITIES ARE SHOWN ON THE PLANS OR KNOWN TO BE WITHIN CONSTRUCTION LIMITS OF THE SCHEDULE PRIOR TO EACH STAGE OF CONSTRUCTION.
3. PRIOR TO CONSTRUCTION, THE CONTRACTOR SHALL UNCOVER EXISTING UTILITIES AT CRITICAL LOCATIONS TO VERIFY EXACT HORIZONTAL AND VERTICAL LOCATION.
4. IOWA CODE 480, UNDERGROUND FACILITIES INFORMATION, REQUIRES VERBAL NOTICE TO IOWA ONE-CALL 1-800-292-8989, NOT LESS THAN 48 HOURS BEFORE EXCAVATING, EXCLUDING WEEKENDS AND HOLIDAYS.
5. THE MEANS OF THE WORK AND THE SAFETY OF THE CONTRACTOR'S EMPLOYEES ARE SOLELY THE RESPONSIBILITY OF THE CONTRACTOR.
6. NO WORK SHALL BE PERFORMED BEYOND THE PROJECT LIMITS WITHOUT PRIOR AUTHORIZATION FROM THE OWNER'S REPRESENTATIVE.
7. PROTECT EXISTING UTILITIES DURING CONSTRUCTION.
8. MAINTAIN POSITIVE DRAINAGE ON THE SITE THROUGHOUT THE PROJECT DURATION.
9. SITE CLEAN-UP SHALL BE PERFORMED ON A DAILY BASIS. SIDEWALKS, PARKING LOTS, ROADWAYS, ETC. SHALL BE KEPT CLEAN AT ALL TIMES.
10. ALL OPEN EXCAVATIONS SHALL BE PROTECTED.
11. REPLACE ANY PROPERTY MONUMENTS REMOVED OR DESTROYED BY CONSTRUCTION. MONUMENTS SHALL BE SET BY A LAND SURVEYOR REGISTERED TO PRACTICE IN THE STATE OF IOWA.
12. CONTROL DUST SPREADING FROM ALL WORK AND STAGING AREAS.
13. ANY WORK REQUIRED TO COMPLETE THE SCOPE OF THIS PROJECT BUT NOT SPECIFICALLY CALLED OUT, SHALL BE CONSIDERED INCIDENTAL TO THE PROJECT. NO ADDITIONAL COMPENSATION SHALL BE ALLOWED FOR THE COMPLETION OF THIS WORK.
14. REPAIR OR REPLACE EXISTING FACILITIES (CURBS, PAVEMENT, PAVEMENT MARKINGS, UTILITIES, ETC.) TO REMAIN, AT NO ADDITIONAL EXPENSE TO THE OWNER.
15. WORK WHICH DOES NOT CONFORM TO THE REQUIREMENTS OF THE CONTRACT WILL BE CONSIDERED UNACCEPTABLE. UNACCEPTABLE WORK, WHETHER THE RESULT OF POOR WORKMANSHIP, USE OF DEFECTIVE MATERIALS, DAMAGE THROUGH CARELESSNESS OR ANY OTHER CAUSE, FOUND TO EXIST PRIOR TO THE FINAL ACCEPTANCE OF THE WORK, SHALL BE REMOVED AND REPLACED IN AN ACCEPTABLE MANNER, AS REQUIRED BY OWNER'S REPRESENTATIVE AT THE CONTRACTOR'S EXPENSE. WORK DONE CONTRARY TO THE INSTRUCTIONS OF THE OWNER'S REPRESENTATIVE, WORK DONE BEYOND THE LINES SHOWN ON THE PLANS OR ANY EXTRA WORK DONE WITHOUT PRIOR AUTHORIZATION.
16. ALL SLOPES IN PAVEMENT SHALL BE UNIFORM TO AVOID PONDING.
17. ALL DIMENSIONS TO BACK-OF-CURB UNLESS NOTED OTHERWISE.
18. EROSION CONTROL MEASURES SHALL BE PROVIDED AND MAINTAINED THROUGHOUT CONSTRUCTION TO MEET REQUIREMENTS OF ALL REGULATORY AGENCIES.
19. CONTRACTOR TO COORDINATE ANY GRADE ADJUSTMENTS WITH THE DESIGN ENGINEER PRIOR TO PROCEEDING WITH THE WORK.
20. THE GENERAL CONTRACTOR SHALL BE RESPONSIBLE FOR THE COORDINATION OF WORK OF ALL SUBCONTRACTOR(S) INVOLVED IN THE PROJECT.
21. CONTRACTOR IS RESPONSIBLE FOR COORDINATING ACCESS TO ADJACENT PROPERTIES THROUGHOUT CONSTRUCTION. ANY WORK ON A PUBLIC STREET OR ALLEY THAT REQUIRES CLOSURE WILL REQUIRE A CLOSURE NOTICE SUBMITTED TO WEST DES MOINES PUBLIC WORKS 48 HOURS IN ADVANCE.
22. ALL EXISTING UTILITY STRUCTURES SHALL BE ADJUSTED TO FINAL FINISH GRADES.
23. ALL WATER WORK, PUBLIC OR PRIVATE, SHALL BE DONE IN ACCORDANCE WITH THE WEST DES MOINES WATER WORKS STANDARD SPECIFICATIONS.
24. CONTRACTOR SHALL NOTIFY WEST DES MOINES WATER WORKS AT LEAST ONE WEEK PRIOR TO BUILDING CONSTRUCTION.
25. ALL CONSTRUCTION WITHIN PUBLIC R.O.W. / EASEMENTS, AND/OR ANY CONNECTION TO PUBLIC SEWERS AND STREETS, SHALL COMPLY WITH THE WEST DES MOINES STANDARD CONSTRUCTION SPECIFICATIONS FOR SUBDIVISIONS, DSM METRO DESIGN STANDARDS, AND WDM ADDENDUMS.
26. AT LEAST ONE WEEK PRIOR TO ANY CONSTRUCTION WITHIN PUBLIC R.O.W. / EASEMENTS AND/OR ANY CONNECTION TO PUBLIC SEWER AND STREETS, THE CONTRACTOR SHALL CONTACT THE WDM CONSTRUCTION DIVISION TO OBTAIN APPLICABLE CITY PERMITS THAT MAY BE NECESSARY. IT IS IMPORTANT TO NOTE CITY APPROVAL OF THIS PLAN IS SUBJECT TO THE APPLICANT OBTAINING ALL NECESSARY EASEMENTS / AGREEMENTS AND APPLICABLE PERMITS.
27. STRIP TOPSOIL AND SOD FROM ALL AREAS WHICH ARE TO BE FILLED OR CUT. RESPREAD TOPSOIL AND BACKFILL TO TOP OF CURB OR EDGE OF PAVEMENT. COMPACT BACKFILL TO PREVENT SETTLING.
28. IT SHALL BE THE CONTRACTORS RESPONSIBILITY TO PROVIDE WASTE AREAS OR DISPOSAL SITES FOR EXCESS MATERIAL WHICH IS NOT DESIRABLE TO BE INCORPORATED IN THE WORK INVOLVED IN THIS PROJECT - EXCAVATION, BROKEN CONCRETE, ETC. NO PAYMENT SHALL BE ALLOWED FOR MATERIAL HAULED TO THESE SITES.
29. ALL LIGHTS ARE TO BE DOWNCAST CUTOFF VARIETY. WALL PACKS ARE PROHIBITED. THE MAXIMUM ILLUMINATION ALLOWED AT THE PROPERTY LINE IS 1 FOOT-CANDLE.
30. ANY NEW ROOFTOP MECHANICAL EQUIPMENT MUST BE SCREENED FROM STREET LEVEL VIEW.
31. CONTACT BUILDING INSPECTION (515-222-3630) A MINIMUM OF 24 HOURS IN ADVANCE FOR PRIVATE UTILITY INSTALLATION INSPECTIONS
32. DESIGNATED BUFFERS SHALL BE LABELED AS A "NO BUILD AREA".

CONSTRUCTION NOT SPECIFICALLY DETAILED OR SPECIFIED WITHIN THE PLANS OR PROJECT SPECIFICATIONS SHALL CONFORM TO THE DES MOINES METROPOLITAN DESIGN STANDARDS WITH WEST DES MOINES ADDENDA AND THE WEST DES MOINES CONSTRUCTION SPECIFICATIONS FOR SUBDIVISIONS.

PROPERTY OWNER/APPLICANT

BROOKFIELD PROPERTIES RETAIL
ATTN: JAMES VARSAMIS
350 N. ORLEANS ST, STE 300
CHICAGO, IL 60654
PHONE: 312-960-5544

ENGINEER

SHIVE-HATTERY, INC.
ATTN: KELSEY SCALLON
4125 WESTOWN PARKWAY
WEST DES MOINES, IA 50266
PHONE: 515-223-8104

LAND AREA

LOT 19 - 37,375 SF (0.858 AC)

LEGAL DESCRIPTION

PROPOSED LOT 19 JORDAN CREEK TOWN CENTER PLAT 1 - REPLAT 1

COMPREHENSIVE LAND USE

EXISTING: TOWN CENTER COMMERCIAL

PROPOSED: TOWN CENTER COMMERCIAL

ZONING

EXISTING: JORDAN CREEK TOWN CENTER PUD

PROPOSED: JORDAN CREEK TOWN CENTER PUD

FLOOD PLAIN NOTE

ACCORDING TO THE FLOOD INSURANCE RATE MAP - PANEL NUMBERS 1902310310F, PUBLISHED BY THE FEDERAL EMERGENCY MANAGEMENT AGENCY AND WITH AN EFFECTIVE DATE OF FEBRUARY 1, 2019, THIS SITE APPEARS TO BE LOCATED IN ZONE "X" (AREAS TO BE OUTSIDE 500 YEAR FLOOD PLAIN.), TO THE BEST OF MY KNOWLEDGE AND BELIEF. THE SURVEYOR UTILIZED THE ABOVE REFERENCED FLOODPLAIN PANEL FOR THIS DETERMINATION; FURTHERMORE, THE SURVEYOR DOES NOT CERTIFY THAT REVISED FLOODPLAIN INFORMATION HAS NOT BEEN PUBLISHED BY THE FEDERAL EMERGENCY MANAGEMENT AGENCY OR SOME OTHER SOURCE.

BENCHMARKS

WDM BENCHMARK #35 - INTERSECTION OF MILLS CIVIC PARKWAY (335TH STREET, DALLAS COUNTY) AND SOUTH 88TH STREET (X AVENUE, DALLAS COUNTY), NORTHEAST CORNER OF INTERSECTION, 206 FEET EAST OF CENTERLINE OF SOUTH 88TH STREET, 49 FEET NORTH OF THE CENTERLINE OF MILLS CIVIC PARKWAY, 2 FEET SOUTH OF THE FENCE LINE. STANDARD BENCHMARK

ELEVATION = 219.04 CITY DATUM (993.05 NAVD88)

WDM BENCHMARK #124 - INTERSECTION OF JORDAN CREEK PARKWAY AND MILLS CIVIC PARKWAY, 169 ± FEET EAST OF THE WEST END OF MEDIAN, IN THE CENTER OF 6 FEET GRASS MEDIAN IN MILLS CIVIC PARKWAY, 17 ± FEET WEST OF THE ANGLE POINT IN THE CURB FOR THE WESTBOUND TURN LANE. STANDARD BENCHMARK

ELEVATION = 203.65 CITY DATUM (977.66 NAVD88)

ADJACENT LANDOWNERS

LOT 1 - JORDAN CREEK ANCHOR ACQUISITION, LLC
LOT 2-3, 9-17, OUTLOT 4-5 - JORDAN CREEK TOWN CENTER, LLC
LOT 4 - THE HIGBEE COMPANY
LOT 5 - WIM-WDM INVESTORS, LLC

Sheet List

Sheet Number	Sheet Title
C000	COVER SHEET
CD01	DEMOLITION PLAN
C101	SITE PLAN
C201	GRADING PLAN
C301	UTILITY PLAN
C501	CONSTRUCTION DETAILS
C502	CONSTRUCTION DETAILS
C503	CONSTRUCTION DETAILS
C504	CONSTRUCTION DETAILS
L101	LANDSCAPE PLAN

LANDSCAPE ARCHITECT

I HEREBY CERTIFY THAT THE PORTION OF THIS TECHNICAL SUBMISSION DESCRIBED BELOW WAS PREPARED BY ME OR UNDER MY DIRECT SUPERVISION AND RESPONSIBLE CHARGE. I AM A DULY LICENSED PROFESSIONAL LANDSCAPE ARCHITECT UNDER THE LAWS OF THE STATE OF IOWA.

HOLLY C. REID
Printed or typed name

Signature Date

PAGES, SHEETS OR DIVISIONS COVERED BY THIS SEAL:
ALL 'L' SHEETS

License Expires: 06/30/2021

CIVIL ENGINEER

I HEREBY CERTIFY THAT THIS ENGINEERING DOCUMENT DESCRIBED BELOW WAS PREPARED BY ME OR UNDER MY DIRECT PERSONAL SUPERVISION AND THAT I AM A DULY LICENSED PROFESSIONAL ENGINEER UNDER THE LAWS OF THE STATE OF IOWA.

Signature: Date

Printed or typed name: KELSEY A. SCALLON
License Number: 25081
My License Renewal Date is: DECEMBER 31, 2021
PAGES, SHEETS OR DIVISIONS COVERED BY THIS SEAL:
ALL 'C' SHEETS

SHIVEHATTERY
ARCHITECTURE + ENGINEERING
4125 Westown Pkwy, Suite 100 | West Des Moines, Iowa
515.223.8104 | www.shive-hattery.com
Iowa | Illinois | Indiana

DAVE & BUSTER'S
JORDAN CREEK TOWN CENTER
BROOKFIELD PROPERTIES RETAIL
101 JORDAN CREEK PKWY, WEST DES MOINES, IA 50265

04/21/2020
CITY APPROVAL
PROJECT NO: 419400-0
CLIENT NO: –

C000

P:\Projects\DMI\190000\Admin\Drawings_CIA\C000 COVER SHEET.dwg
Printed: 4/21/2020 10:43:09 AM

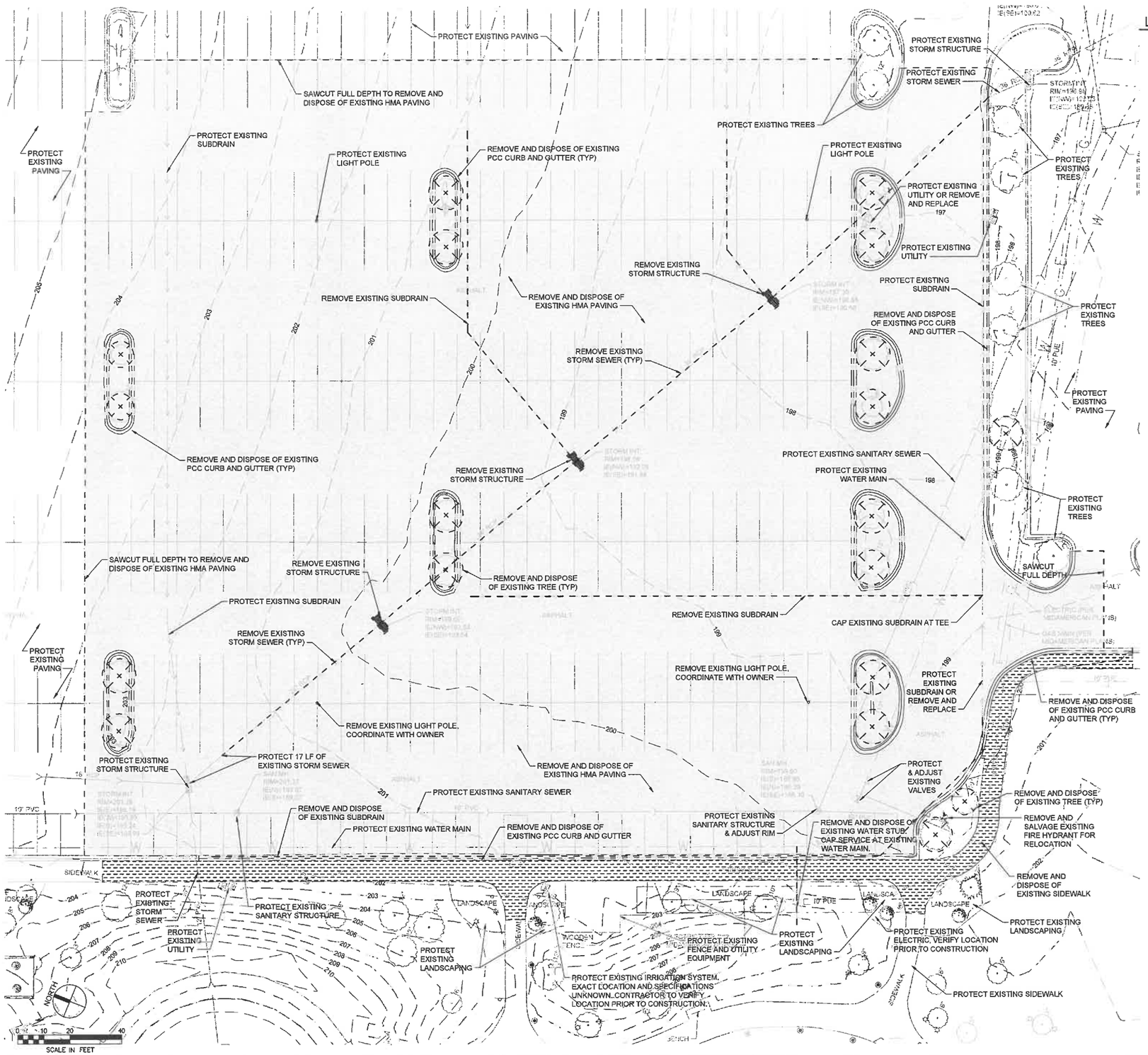

LEGEND:

EXISTING	DESCRIPTION	PROPOSED
	PROPERTY LINE	
	STORM SEWER	
	STORM SUBDRAIN	
	WATER SERVICE	W
	GAS SERVICE	G
	SANITARY SEWER	
	SANITARY SERVICE	
	SANITARY MANHOLE	
	CLEANOUT	
	STORM MANHOLE	
	STORM INTAKES	
	FIRE HYDRANT	
	WATER VALVE	
	LIGHT FIXTURE	
	ELECTRIC TRANSFORMER	
	BOLLARD	
	SIGNAGE	
	BUILDING	
	TREE	
909	MINOR CONTOUR	910
910	MAJOR CONTOUR	909
	ACC PAVING REMOVAL	
	PCC SIDEWALK REMOVAL	
	LANDSCAPING REMOVAL	
	LIGHT DUTY PAVING	
	HEAVY DUTY P.C.C. PAVING	
	5" P.C.C. SIDEWALK	
	6" REINFORCED P.C.C. SIDEWALK	

SHIVEHATTERY
ARCHITECTURE + ENGINEERING
4125 Westown Pkwy, Suite 100 | West Des Moines, Iowa 50266
515.223.8104 | www.shive-hattery.com
Iowa | Illinois | Indiana

DAVE & BUSTER'S
JORDAN CREEK TOWN CENTER

BROOKFIELD PROPERTIES RETAIL
101 JORDAN CREEK PKWY, WEST DES MOINES, IA 50265

DRAWN: KRW
APPROVED: KAS
ISSUED FOR: CITY APPROVAL
DATE: 04/21/2020
PROJECT NO: 4194004
FIELD BOOK: –
CLIENT NO: –

DEMOLITION PLAN

CD01

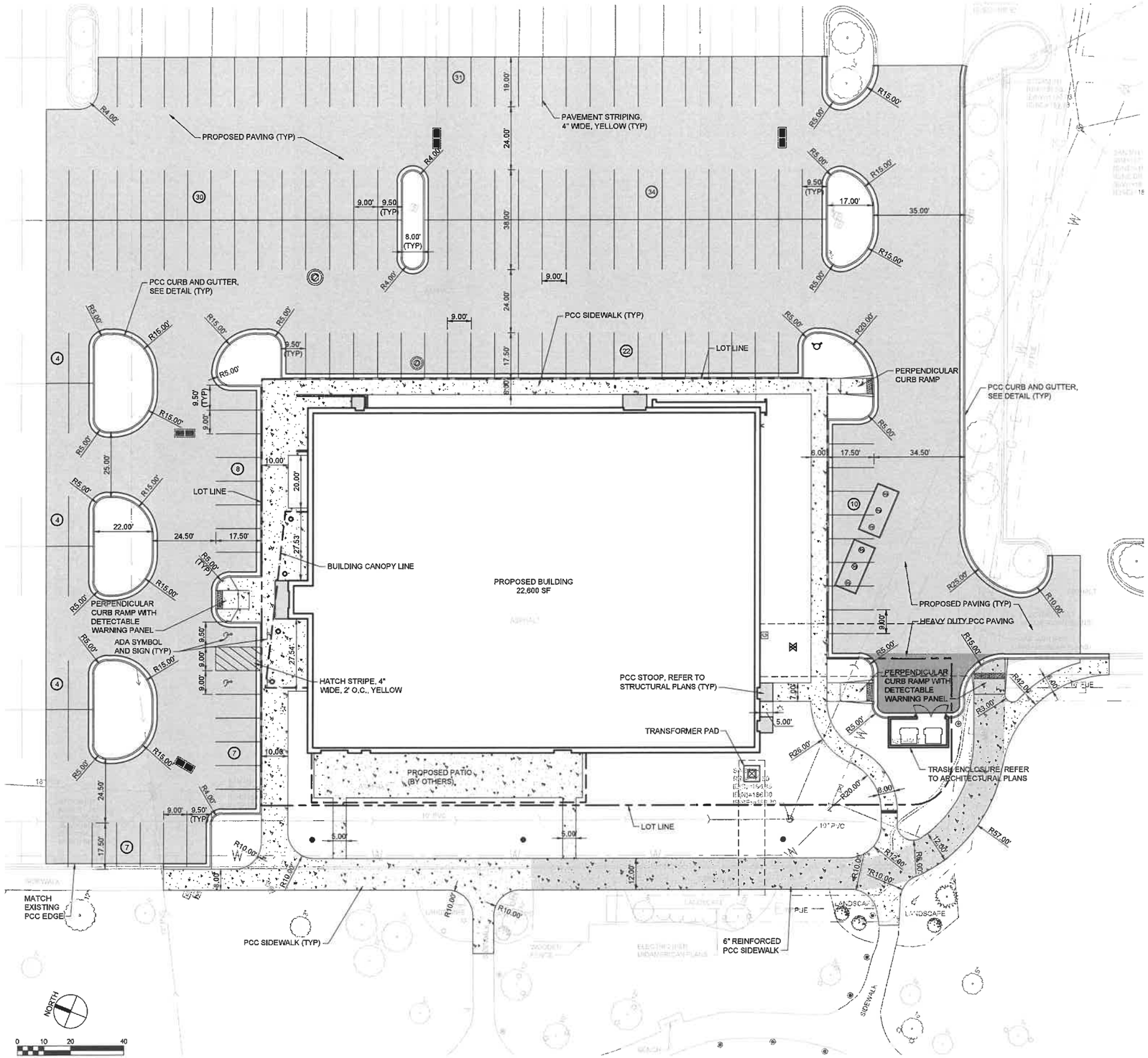

IMPERVIOUS AREA CALCULATIONS

LOT 18:
5,890 SF IMPERVIOUS AREA REMOVED

PROPOSED LOT 19:
EXISTING IMPERVIOUS AREA = 36,599 SF
PROPOSED IMPERVIOUS AREA = 30,390 SF
6,209 SF IMPERVIOUS AREA REMOVED

SHIVEHATTERY
ARCHITECTURE + ENGINEERING
4125 Westown Pkwy, Suite 100 | West Des Moines, Iowa 50266
515.223.9104 | www.shive-hattery.com
Iowa | Illinois | Indiana

DAVE & BUSTER'S JORDAN CREEK TOWN CENTER

BROOKFIELD PROPERTIES RETAIL
101 JORDAN CREEK PKWY, WEST DES MOINES, IA 50265

DRAWN: KRW
APPROVED: KAS
ISSUED FOR: CITY APPROVAL
DATE: 04/21/2020
PROJECT NO: 419400-0
FIELD BOOK: —
CLIENT NO: —

SITE PLAN

C101

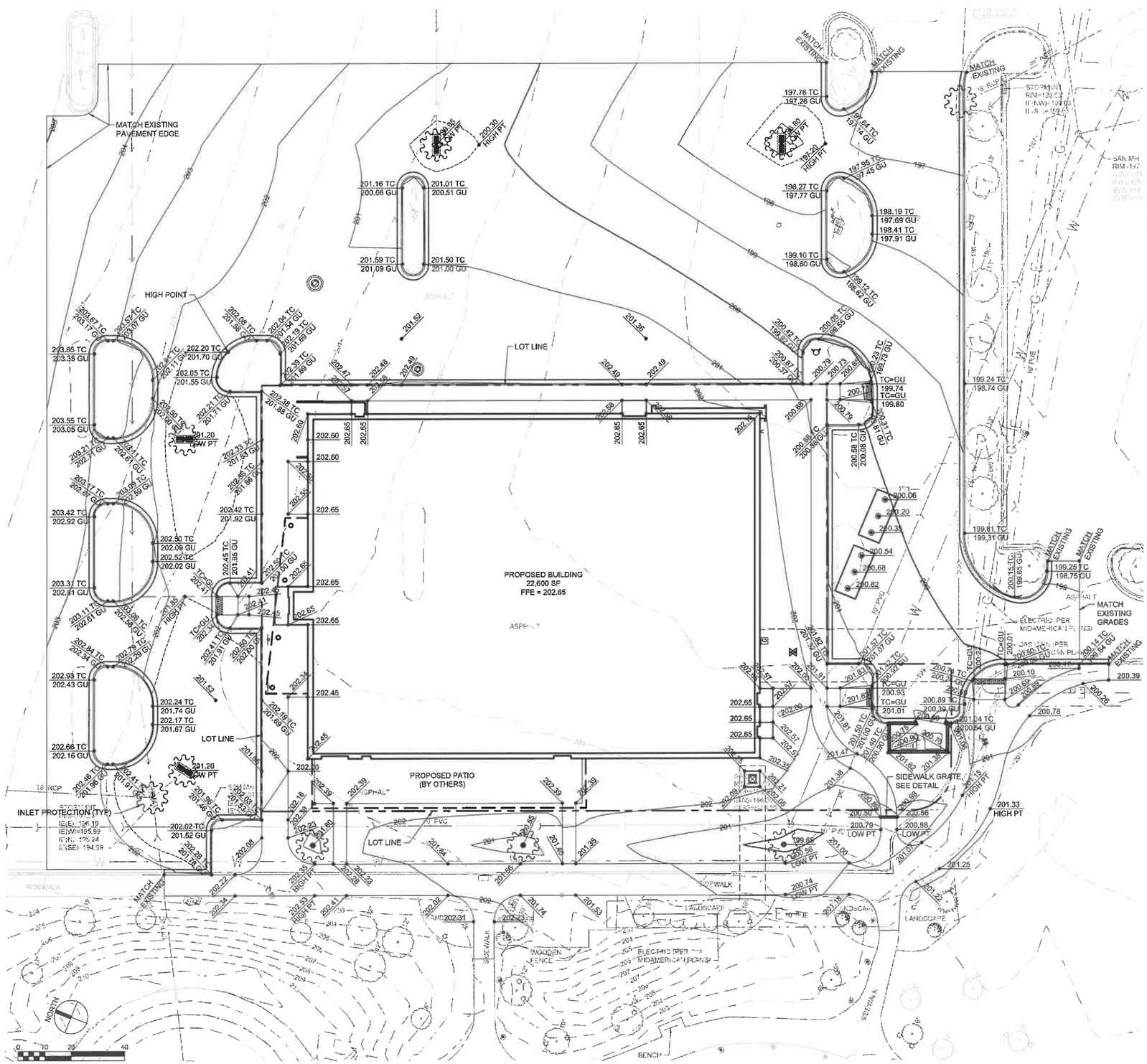

GRADING AND EROSION CONTROL NOTES:

1. GRADING OF BUILDING PAD AND ASSOCIATED SITE IMPROVEMENTS SHALL BE COMPLETED BY THE TENANT'S CONTRACTOR.
2. BEST MANAGEMENT PRACTICES (BMP'S) AND CONTROLS SHALL CONFORM TO FEDERAL, STATE, OR LOCAL REQUIREMENTS OR MANUAL OF PRACTICE, AS APPLICABLE. CONTRACTOR SHALL IMPLEMENT ADDITIONAL CONTROLS AS DIRECTED BY PERMITTING AGENCY OR OWNER.
3. CONTRACTOR SHALL MINIMIZE CLEARING TO THE MAXIMUM EXTENT PRACTICAL.
4. ALL WASH WATER (CONCRETE TRUCKS, VEHICLE CLEANING, EQUIPMENT CLEANING, ETC.) SHALL BE DETAINED AND PROPERLY TREATED OR DISPOSED.
5. SUFFICIENT OIL AND GREASE ABSORBING MATERIALS SHALL BE MAINTAINED ON SITE OR READILY AVAILABLE TO CONTAIN AND CLEAN-UP FUEL OR CHEMICAL SPILLS AND LEAKS.
6. DUST ON THE SITE SHALL BE CONTROLLED. THE USE OF MOTOR OILS AND OTHER PETROLEUM BASED OR TOXIC LIQUIDS FOR DUST SUPPRESSION OPERATIONS IS PROHIBITED.
7. RUBBISH, TRASH, GARBAGE, LITTER, OR OTHER SUCH MATERIALS SHALL BE DEPOSITED INTO SEALED CONTAINERS. MATERIALS SHALL BE PREVENTED FROM LEAVING THE PREMISES THROUGH THE ACTION OF WIND OR STORM WATER DISCHARGE INTO DRAINAGE DITCHES OR WATERS OF THE STATE.
8. DISTURBED PORTIONS OF THE SITE WHERE CONSTRUCTION ACTIVITY HAS PERMANENTLY STOPPED SHALL BE SEEDED. THESE AREAS SHALL BE SEEDED NO LATER THAN 14 DAYS AFTER THE LAST CONSTRUCTION ACTIVITY OCCURRING IN THESE AREAS.
9. ALL MATERIALS SPILLED, DROPPED, WASHED, OR TRACKED FROM VEHICLES ONTO ROADWAYS OR INTO STORM DRAINS MUST BE REMOVED IMMEDIATELY.
10. CONTRACTORS OR SUBCONTRACTORS WILL BE RESPONSIBLE FOR REMOVING SEDIMENT THAT MAY HAVE COLLECTED IN THE STORM SEWER DRAINAGE SYSTEMS IN CONJUNCTION WITH THE STABILIZATION OF THE SITE.
11. SLOPES SHALL BE LEFT IN A ROUGHENED CONDITION DURING THE GRADING PHASE TO REDUCE RUNOFF VELOCITIES AND EROSION.
12. THE CONTRACTOR SHALL BE RESPONSIBLE FOR ADJUSTING THE EROSION CONTROL MEASURES (SILT FENCES, WATTLES, INLET PROTECTION, ETC.) TO PREVENT EROSION.
13. ALL STORM SEWER INTAKES THAT RECEIVE STORMWATER RUNOFF FROM DISTURBED AREAS SHALL BE PROVIDED WITH A FILTER SACK.
14. CONTRACTOR SHALL BE RESPONSIBLE FOR INSTALLATION, PERIODIC CHECKING AND REINSTALLATION OF EROSION AND SEDIMENTATION CONTROL MEASURES.

SHIVEHATTERY
ARCHITECTURE + ENGINEERING
4125 Westown Pkwy, Suite 100 | West Des Moines, Iowa 50266
515.223.8104 | www.shive-hattery.com
Iowa | Illinois | Indiana

DAVE & BUSTER'S
JORDAN CREEK TOWN CENTER

BROOKFIELD PROPERTIES RETAIL
101 JORDAN CREEK PKWY, WEST DES MOINES, IA 50265

DRAWN: KAS
APPROVED: KAS
ISSUED FOR: CITY APPROVAL
DATE: 04/21/2020
PROJECT NO: 4194004
FIELD BOOK: —
CLIENT NO: —

GRADING PLAN

C201

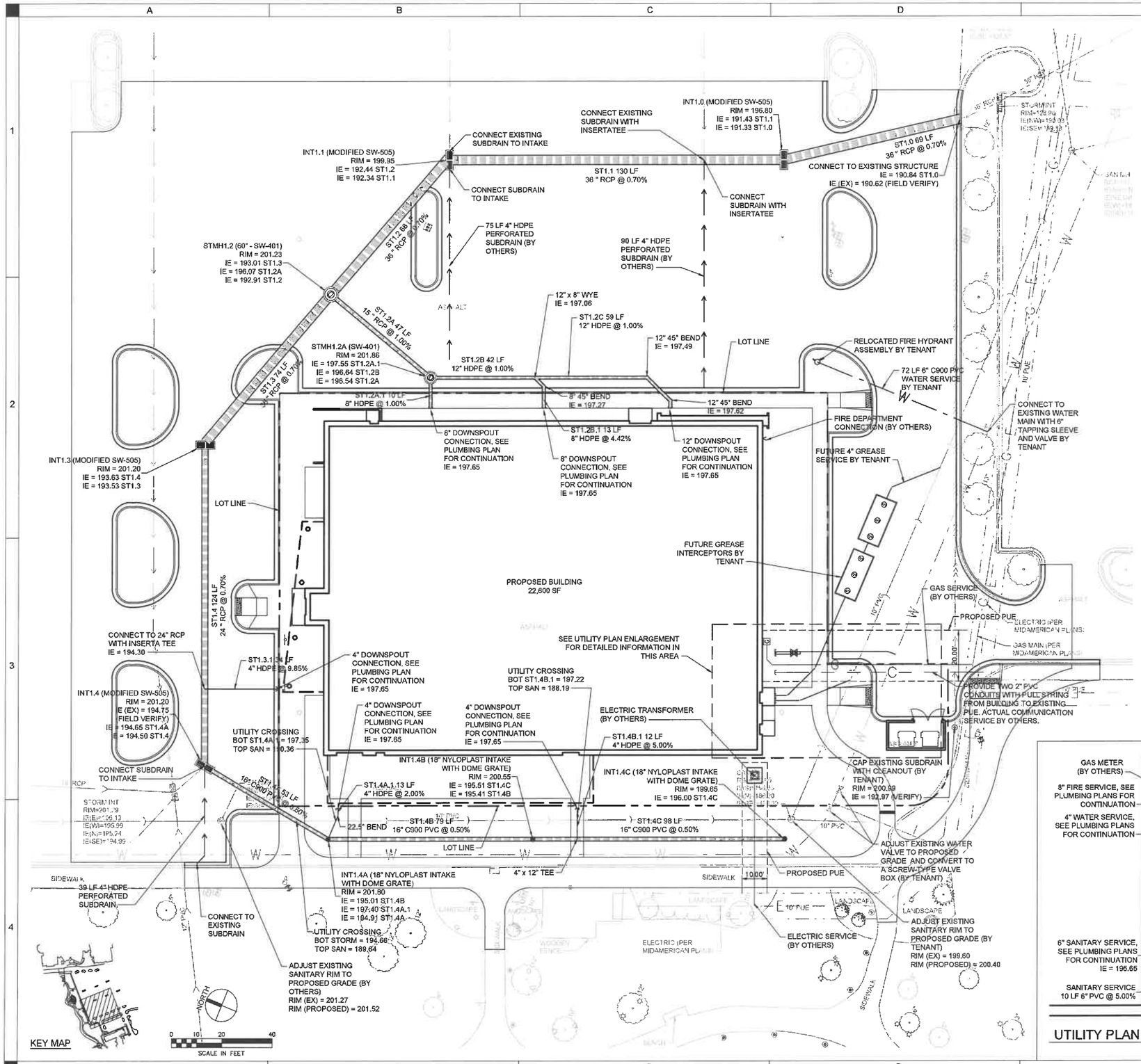

WATER LINE CONSTRUCTION NOTES:

1. ALL WATER WORK, PUBLIC OR PRIVATE, SHALL BE DONE IN ACCORDANCE WITH WEST DES MOINES WATER WORK STANDARD SPECIFICATIONS. THE GENERAL CONTRACTOR SHALL BE RESPONSIBLE FOR COMPLIANCE WITH THE WEST DES MOINES WATER WORKS AND CITY'S CROSS CONNECTION CONTROL/CONTAINMENT PROVISION.
2. IT IS THE CONTRACTOR'S RESPONSIBILITY TO VERIFY THE EXACT LOCATIONS AND DEPTHS OF ALL EXISTING UTILITIES AND WHETHER ADDITIONAL UTILITIES EXIST.
3. CONTRACTOR SHALL NOTIFY WEST DES MOINES WATER WORKS ONE WEEK PRIOR TO CONSTRUCTION.
4. CONTRACTOR SHALL CONTACT WEST DES MOINES WATER WORKS A MINIMUM OF TWO WORKING DAYS BEFORE COMPLETING WATER TAP.
5. WATER TO BE INSTALLED WITH A MINIMUM COVER OF 5 FEET OR LOWER TO ACCOMMODATE UTILITY CROSSINGS.
6. CONTACT FIRE DEPARTMENT OF ANY CHANGES THAT AFFECT FIRE/EMERGENCY ACCESS TO SITE, BUILDING, FDC'S, PIV'S, HYDRANTS, AND FRONT DOORS.
7. ALL WATER LINE SHALL BE PVC C900 DR 14.
8. ALL EXISTING AND PROPOSED HYDRANTS AND VALVES SHALL BE ADJUSTED TO FINAL GRADES.
9. THE GENERAL CONTRACTOR SHALL BE RESPONSIBLE FOR THE PROPER INSTALLATION OF AN APPROVED BACKFLOW PREVENTION ASSEMBLY(IES) FOR CONTAINMENT IN ALL NEW CONSTRUCTION. BACKFLOW PREVENTION TO BE INSTALLED PER CITY ORDINANCE 1297, 54-1998. CONTRACTOR SHALL NOTIFY WEST DES MOINES WATER WORKS, RALPH RENTERIA, ENGINEERING TECHNICIAN (515-222-3465) A MINIMUM OF 24 HOURS AFTER INSTALLATION AND TESTING OF ALL BACKFLOW DEVICES TO SCHEDULE FINAL INSPECTION.
10. LOOP SYSTEM AROUND THE MALL BUILDING SHALL BE CAPABLE OF SUSTAINING 200 PSI. ALL PIPING, FITTINGS, VALVES, & HYDRANTS SHALL MEET OR EXCEED THIS PRESSURE RATING.
    PIPE: PVC - ANSI/AWWA C900 DR14
    DUCTILE IRON - PER URBAN STANDARD SPECIFICATIONS
    FITTINGS: PVC PIPE - DUCTILE IRON MECHANICAL JOINT, PRESSURE RATING 350 PSI
    DUCTILE IRON PIPE - PER URBAN STANDARD SPECIFICATIONS
    GATE VALVES: 200 PSI WORKING PRESSURE, MINIMUM. VALVES TO MATCH HYDRANT AND AUXILLARY VALVE BY HYDRANT MANUFACTURER.
    PRESSURE & LEAKAGE TESTING: TEST @ 225 PSI, 1.35 GPH MAXIMUM ALLOWED PER 1000 FEET PIPE

    THRUST BLOCKS SHALL BE PROVIDED IN ACCORDANCE WITH THE FOLLOWING SCHEDULE:

MALL LOOP AND CONNECTIONS TO MAIN - BASED ON 200 PSI WATER PRESSURE						
	BEND ANGLE	11.25°	22.5°	45°	90°	TEE/DEAD END
PIPE SIZE	SOIL TYPE					
4" & 6"	GLACIAL TILL (2000 PSF BEARING)	1 SF	2 SF	3 SF	5 SF	4 SF
8"	GLACIAL TILL	2	3	5	9	7
12"	GLACIAL TILL	3	6	11	19	15
4" & 6"	LOESS (1000 PSF BEARING)	2	4	6	10	8
8"	LOESS	4	8	10	18	14
12"	LOESS	6	12	22	38	30

    REMAINING WATER SYSTEMS PER SUDAS BASED ON 150 PSI WATER PRESSURE; VALUES CAN BE REDUCED BY A FACTOR OF 2 FOR INSTALLATION IN GLACIAL TILLS.

    GEOTECHNICAL ENGINEER TO EVALUATE SOIL TYPES PRIOR TO CONSTRUCTION OF THRUST BLOCKS.
11. PROVIDE TRACER WIRE SYSTEM AND TAPE LOCATED 2 FEET ABOVE WATER MAIN.
12. SITE IS SERVED WITH PRIVATE WATER MAIN. PROTECT AT ALL TIMES.
13. BUILDING SHUTOFF VALVES SHALL BE A MINIMUM 10' FROM BUILDING OVERHANGS

WATER MAIN QUANTITIES (PRIVATE)

47 LF	8" WATER SERVICE
11 LF	4" WATER SERVICE
72 LF	6" WATER SERVICE
1 EA	4"X8" TEE
1 EA	4" 90° BEND
1 EA	8" 45° BEND
1 EA	FIRE HYDRANT ASSEMBLY
2 EA	TAPPING SLEEVE AND VALVE

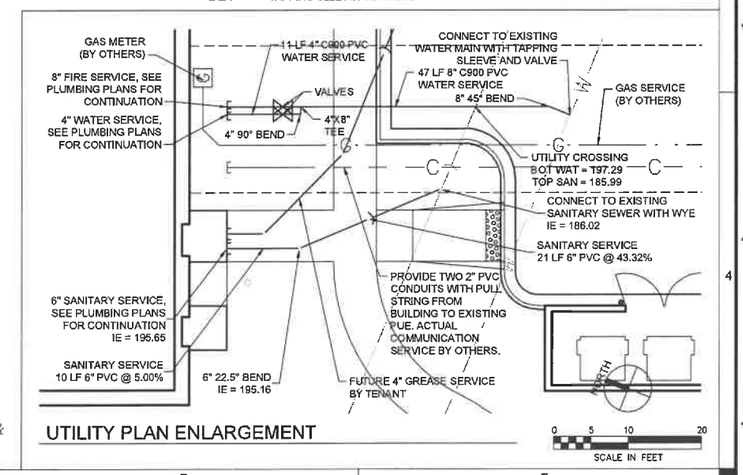

UTILITY PLAN ENLARGEMENT

SHIVEHATTERY
ARCHITECTURE + ENGINEERING
4125 Westown Pkwy, Suite 100 | West Des Moines, Iowa 50266
515.223.8104 | www.shive-hattery.com
Iowa | Illinois | Indiana

DAVE & BUSTER'S
JORDAN CREEK TOWN CENTER

BROOKFIELD PROPERTIES RETAIL
101 JORDAN CREEK PKWY, WEST DES MOINES, IA 50265

DRAWN: KRW
APPROVED: KAS
ISSUED FOR: CITY APPROVAL
DATE: 04/21/2023
PROJECT NO: 419400.0
FIELD BOOK: –
CLIENT NO: –

UTILITY PLAN

C301

CHANGES IN PIPE DEPTH

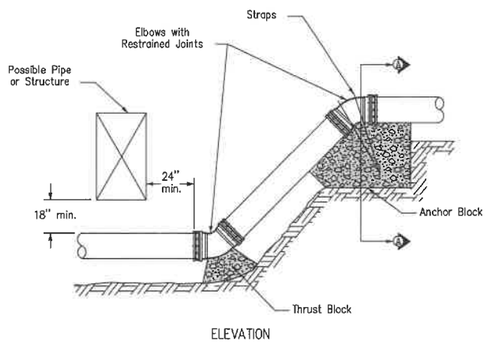

ELEVATION

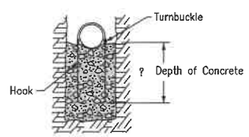

SECTION A-A

DEAD ENDS (ALTERNATE METHOD)

Use only when allowed by the Engineer, or when specified in the contract documents.

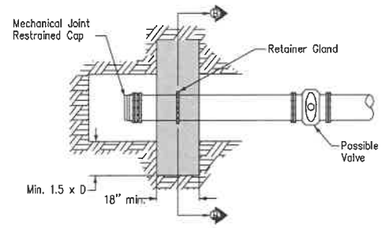

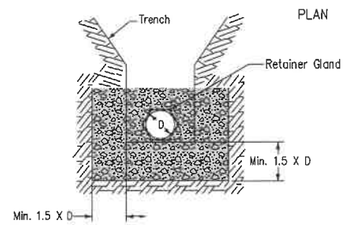

SECTION B-B

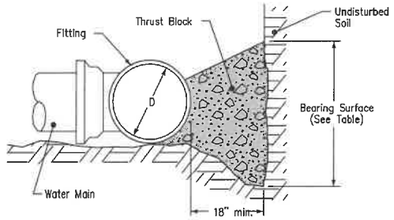

TYPICAL SECTION

Extend thrust blocks to undisturbed soil. Excavation into trench wall may be necessary.

Form vertical surfaces of poured concrete thrust blocks except on bearing surface.

Encase all fittings in polyethylene wrap. Do not allow concrete to directly contact joints or fitting bolts.

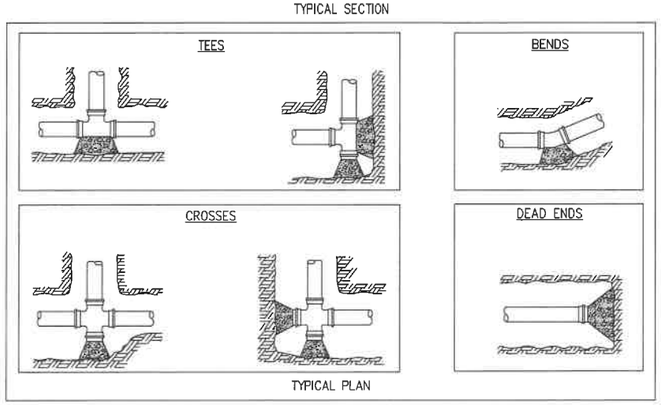

TYPICAL PLAN

A4 THRUST BLOCKS
NOT TO SCALE

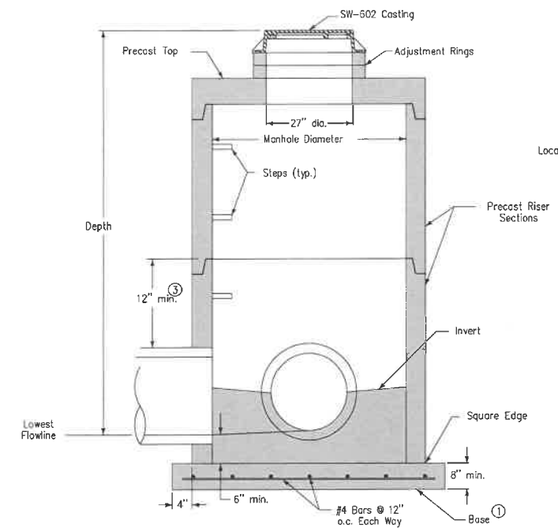

TYPICAL SECTION

① Cast-in-place base shown. If base is precast integral with bottom riser, the footprint of the base is not required to extend beyond the outer edge of the riser.

② For additional configurations, maintain a minimum of 12 inches of concrete between vertical edges of pipe openings.

③ 12 inch minimum riser height above all pipe openings.

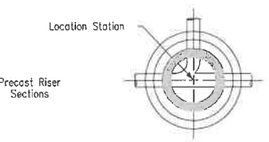

PLAN

Manhole Diameter (inches)	Maximum Pipe Diameter ② (inches) for 2 Pipes	
	At 180° Separation	At 90° Separation
48	24	18
60	36	24
72	42	30
84	48	36
96	60	42

D2 CIRCULAR STORM SEWER MANHOLE, (SW-401)
NOT TO SCALE

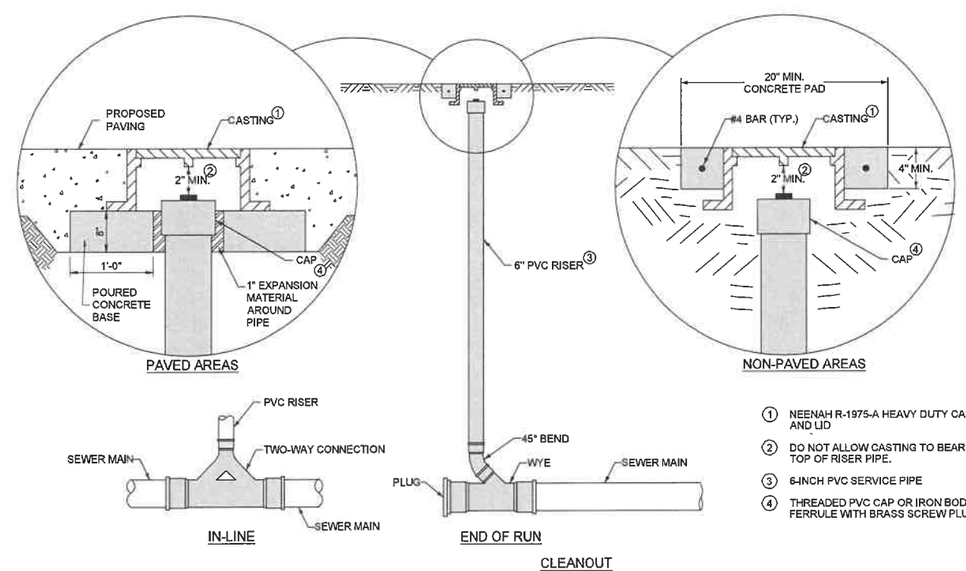

① NEENAH R-1975-A HEAVY DUTY CASTING AND LID

② DO NOT ALLOW CASTING TO BEAR ON TOP OF RISER PIPE.

③ 6-INCH PVC SERVICE PIPE

④ THREADED PVC CAP OR IRON BODY FERRULE WITH BRASS SCREW PLUG

D4 SUBDRAIN CLEANOUTS
NOT TO SCALE

SHIVEHATTERY
ARCHITECTURE + ENGINEERING
4125 Westown Pkwy, Suite 100 | West Des Moines, Iowa 50266
515.223.8104 | www.shive-hattery.com
Iowa | Illinois | Indiana

DAVE & BUSTER'S
JORDAN CREEK TOWN CENTER

BROOKFIELD PROPERTIES RETAIL
101 JORDAN CREEK PKWY, WEST DES MOINES, IA 50265

DRAWN: KRW
APPROVED: KAS
ISSUED FOR: CITY APPROVAL
DATE: 04/21/2020
PROJECT NO: 419402-0
FIELD BOOK: --
CLIENT NO: --

CONSTRUCTION DETAILS

C501

P:\Projects\419402\Drawings\Drawings_C-series\C501 CONSTRUCTION DETAILS.dwg
Plotted: 4/23/2020 11:38:13 AM

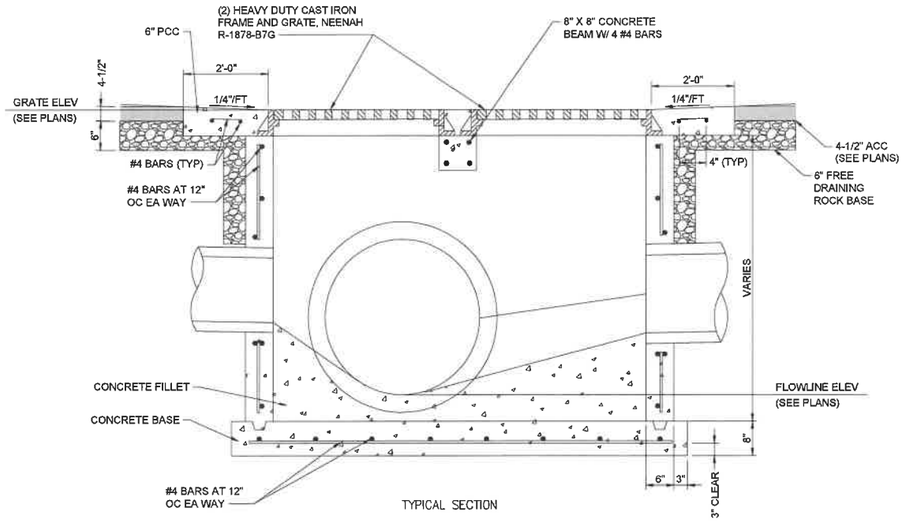

TYPICAL SECTION

REINFORCING BAR LIST						
Mark	Size	Location	Shape	Count	Length	Spacing
4t1	4	Beam	——	4	2'-8"	4"
4b1	4	Base	——	4	7'-10"	10"
4b2	4	Base	——	8	3'-2"	12"
4w1	4	Walls	——	20	Wall Height minus 4"	12"
4w2	4	Long Walls	——	Varies	7'-4"	12"
4w3	4	Short Walls	——	Varies	2'-8"	12"

MAXIMUM PIPE DIAMETERS		
Pipe Location	Precast Structure	Cast-in-place Structure
Short Wall	15"	18"
Long Wall	60"	66"

1. Install four #4 diagonal bars at all pipe openings.
2. Cast-in-place base shown. If base is precast integral with walls, the footprint of the base is not required to extend beyond the outer edge of the walls.
3. 12 inch minimum wall height above all pipes.

Refer to SW-514 for boxout details.

1. Install four #4 diagonal bars at all pipe openings.
2. Cast-in-place base shown. If base is precast integral with walls, the footprint of the base is not required to extend beyond the outer edge of the walls.
3. 12 inch minimum wall height above all pipes.

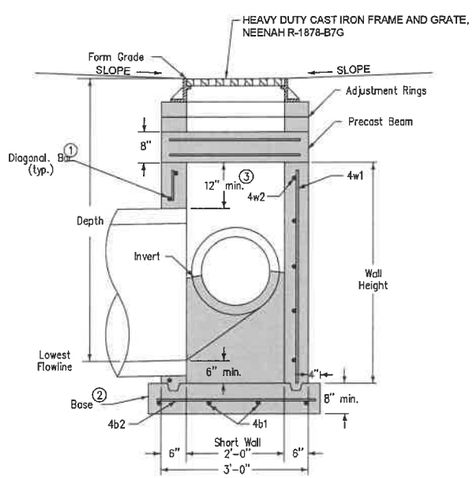

SECTION A-A

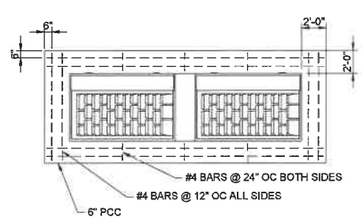

PLAN

A4 DOUBLE GRATE INTAKE, (MODIFIED SW-505)
NOT TO SCALE

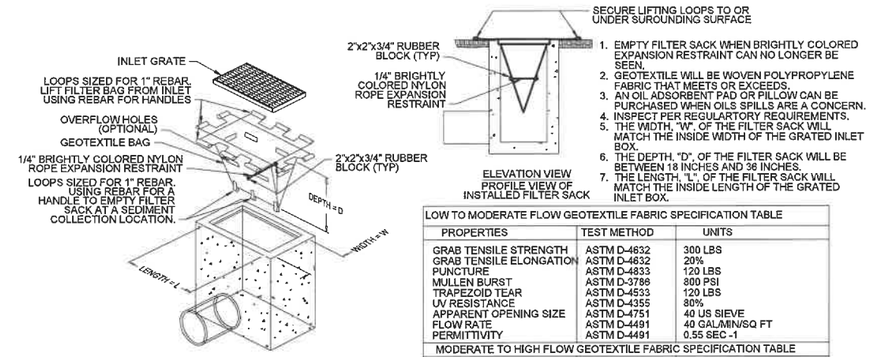

ISOMETRIC VIEW
DO NOT USE ON ROADWAYS WHERE PONDING MAY CAUSE TRAFFIC HAZARDS

ELEVATION VIEW
PROFILE VIEW OF INSTALLED FILTER SACK

1. EMPTY FILTER SACK WHEN BRIGHTLY COLORED EXPANSION RESTRAINT CAN NO LONGER BE SEEN.
2. GEOTEXTILE WILL BE WOVEN POLYPROPYLENE FABRIC THAT MEETS OR EXCEEDS.
3. AN OIL ADSORBENT PAD OR PILLOW CAN BE PURCHASED WHEN OILS SPILLS ARE A CONCERN.
4. INSPECT PER REGULARTORY REQUIREMENTS.
5. THE WIDTH, "W", OF THE FILTER SACK WILL MATCH THE INSIDE WIDTH OF THE GRATED INLET BOX.
6. THE DEPTH, "D", OF THE FILTER SACK WILL BE BETWEEN 18 INCHES AND 36 INCHES.
7. THE LENGTH, "L", OF THE FILTER SACK WILL MATCH THE INSIDE LENGTH OF THE GRATED INLET BOX.

LOW TO MODERATE FLOW GEOTEXTILE FABRIC SPECIFICATION TABLE		
PROPERTIES	TEST METHOD	UNITS
GRAB TENSILE STRENGTH	ASTM D-4632	300 LBS
GRAB TENSILE ELONGATION	ASTM D-4632	20%
PUNCTURE	ASTM D-4833	120 LBS
MULLEN BURST	ASTM D-3786	800 PSI
TRAPEZOID TEAR	ASTM D-4533	120 LBS
UV RESISTANCE	ASTM D-4355	80%
APPARENT OPENING SIZE	ASTM D-4751	40 US SIEVE
FLOW RATE	ASTM D-4491	40 GAL/MIN/SQ FT
PERMITTIVITY	ASTM D-4491	0.55 SEC -1
MODERATE TO HIGH FLOW GEOTEXTILE FABRIC SPECIFICATION TABLE		
PROPERTIES	TEST METHOD	UNITS
GRAB TENSILE STRENGTH	ASTM D-4632	265 LBS
GRAB TENSILE ELONGATION	ASTM D-4632	20%
PUNCTURE	ASTM D-4833	135 LBS
MULLEN BURST	ASTM D-3786	8420 PSI
TRAPEZOID TEAR	ASTM D-4533	45 LBS
UV RESISTANCE	ASTM D-4355	90%
APPARENT OPENING SIZE	ASTM D-4751	20 US SIEVE
FLOW RATE	ASTM D-4491	200 GAL/MIN/SQ FT
PERMITTIVITY	ASTM D-4491	1.5 SEC -1

FILTER SACKS
(GRATED INLETS)

D2 FILTER SACKS
NOT TO SCALE

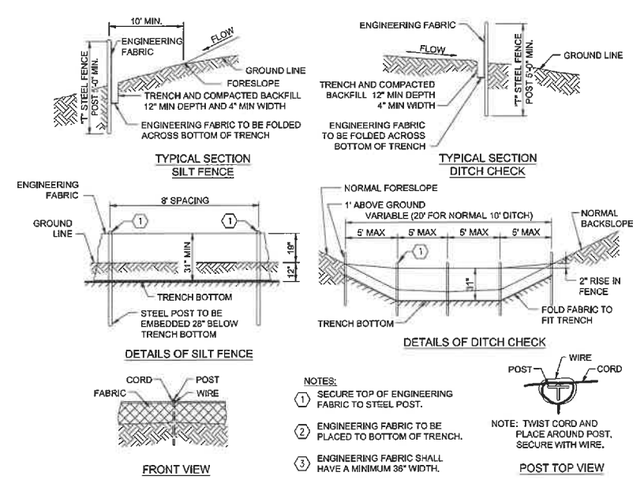

D4 SILT FENCE
NOT TO SCALE

SHIVEHATTERY
ARCHITECTURE + ENGINEERING
4125 Westown Pkwy, Suite 100 | West Des Moines, Iowa 50266
515.223.8104 | www.shive-hattery.com
Iowa | Illinois | Indiana

DAVE & BUSTER'S
JORDAN CREEK TOWN CENTER

BROOKFIELD PROPERTIES RETAIL
101 JORDAN CREEK PKWY, WEST DES MOINES, IA 50265

DRAWN: KRW
APPROVED: KAS
ISSUED FOR: CITY APPROVAL
DATE: 04/21/2020
PROJECT NO: 419402-0
FIELD BOOK: —
CLIENT NO: —

CONSTRUCTION DETAILS

C502

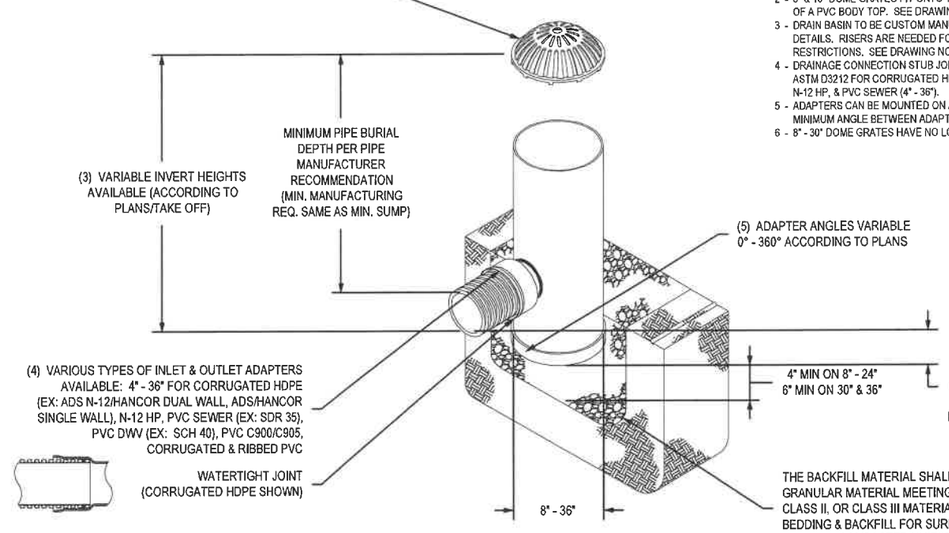

1 - 8" - 30" DOME GRATES SHALL BE DUCTILE IRON PER ASTM A536 GRADE 70-50-05.
2 - 8" & 10" DOME GRATES FIT ONTO THE DRAIN BASINS WITH THE USE OF A PVC BODY TOP. SEE DRAWING NO. 7001-110-045.
3 - DRAIN BASIN TO BE CUSTOM MANUFACTURED ACCORDING TO PLAN DETAILS. RISERS ARE NEEDED FOR BASINS OVER 84" DUE TO SHIPPING RESTRICTIONS. SEE DRAWING NO. 7001-110-065.
4 - DRAINAGE CONNECTION STUB JOINT TIGHTNESS SHALL CONFORM TO ASTM D3212 FOR CORRUGATED HDPE (EX: ADS N-12/HANCOR DUAL WALL), N-12 HP, & PVC SEWER (4" - 36").
5 - ADAPTERS CAN BE MOUNTED ON ANY ANGLE 0° TO 360°. TO DETERMINE MINIMUM ANGLE BETWEEN ADAPTERS SEE DRAWING NO. 7001-110-012.
6 - 8" - 30" DOME GRATES HAVE NO LOAD RATING.

C2 DRAIN BASIN WITH DOME GRATE
NOT TO SCALE

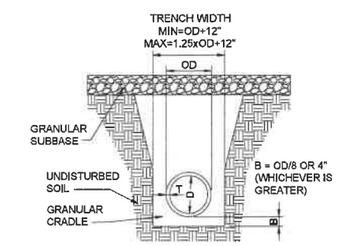

NOTE: SUBGRADE SHOULD BE EXCAVATED OR OVER EXCAVATED, IF NECESSARY, SO A UNIFORM FOUNDATION FREE OF PROTRUDING ROCKS MAY BE PROVIDED.

A3 RIGID PIPE EXCAVATION & BEDDING
NOT TO SCALE

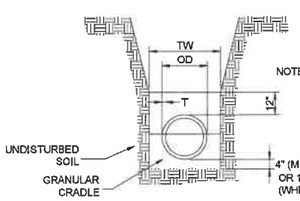

NOTE: OD = OUTSIDE DIAMETER OF PIPE
TW = TRENCH WIDTH AT 12" ABOVE TOP OF PIPE:
MIN. = OD + 16" OR 1.25 x OD + 12"
(WHICHEVER IS GREATER)

SUBGRADE SHOULD BE EXCAVATED OR OVER EXCAVATED, IF NECESSARY, SO A UNIFORM FOUNDATION FREE OF PROTRUDING ROCKS MAY BE PROVIDED.

NOTE: SANITARY PIPE BEDDING SHALL BE PER THE WDM STANDARD SPECS. SEE WDM DWG NO. 4.1. WATER PIPE BEDDING SHALL BE PER THE WDMWW STANDARD SPECS. SEE WDMWW DWG NO. 3.

A4 FLEXIBLE PIPE BEDDING
NOT TO SCALE

If crosswalks are marked, locate ramps, exclusive of flares, within the crosswalk markings.

1. Perpendicular ramp: Maximum running slope of 8.3%. Maximum cross slope of 2%. At mid-block crossings, cross slope may exceed 2% to match roadway grade.
2. Parallel ramp: Maximum cross slope of 2%. The length of the parallel ramp is not required to exceed 15 feet, regardless of resulting slope. Do not exceed 8.3% slope for parallel ramps shorter than 15 feet.
3. Landing: Maximum slope of 2% in any direction. At mid-block crossings, cross slope of landing may exceed 2% to match roadway grade.
4. Flare required if ramp is contiguous with sidewalk.
5. Provide 2% cross slope across median for drainage. For wide medians (12 feet or greater), curb ramps may be used at both sides with a 48 inch by 48 inch minimum landing in between.
6. For crossings controlled by signals and timed for full crossing, detectable warnings are not required at medians.

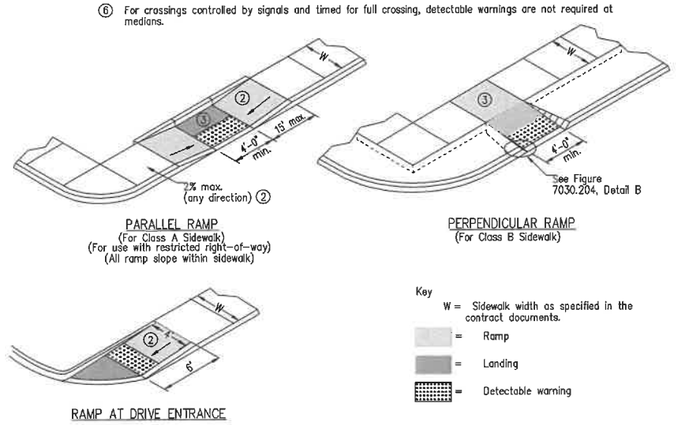

C4 SIDEWALK RAMP
NOT TO SCALE

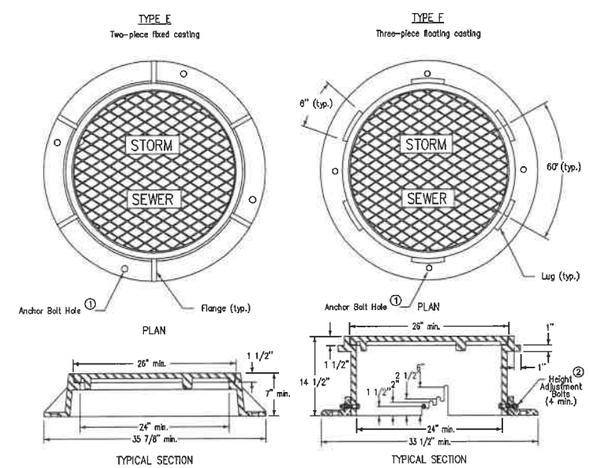

FRAME NOTES:
SIZE AND SPACING OF LUGS AND FLANGES MAY VARY.

COVER NOTES:
ROUGHNESS PATTERN AND TEXT STYLES MAY VARY. MINIMUM ONE CONCEALED PICKHOLE.

1 IF FRAME IS REQUIRED TO BE ATTACHED TO STRUCTURE, DRILL FOUR 7/8" DIAMETER HOLES OR SLOTS, EQUALLY SPACED AROUND FRAME.

2 REMOVE BOLTS UPON COMPLETION OF PAVING

E4 CASTINGS FOR STORM SEWER MANHOLES, (SW-602)
NOT TO SCALE

SHIVEHATTERY
ARCHITECTURE + ENGINEERING
4125 Westown Pkwy, Suite 100 | West Des Moines, Iowa 50266
515.223.8104 | www.shive-hattery.com
Iowa | Illinois | Indiana

DAVE & BUSTER'S
JORDAN CREEK TOWN CENTER

BROOKFIELD PROPERTIES RETAIL
101 JORDAN CREEK PKWY, WEST DES MOINES, IA 50265

DRAWN: KRW
APPROVED: KAS
ISSUED FOR: CITY APPROVAL
DATE: 04/21/2020
PROJECT NO: 419400-0
FIELD BOOK: –
CLIENT NO: –

CONSTRUCTION DETAILS

C503

P:\Projects\2041\419400\Drawings\Construction\C-503 CONSTRUCTION DETAILS.dwg
Plotted: 4/21/2020 11:28:29 AM

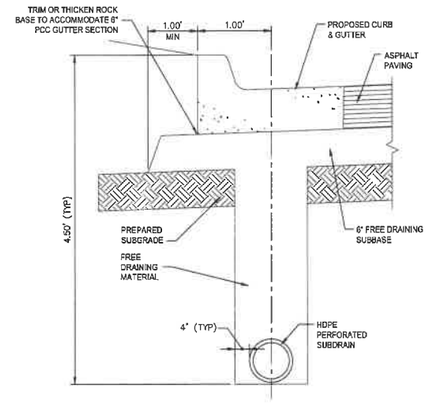

C2 CURB AND GUTTER SUBDRAIN
NOT TO SCALE

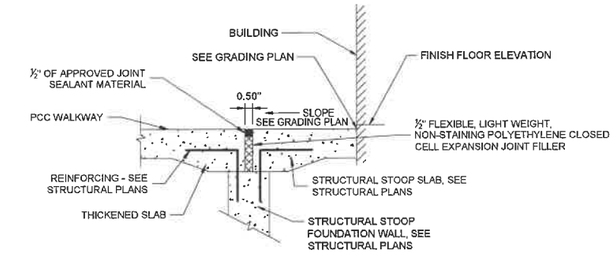

E1 PCC WALK @ STRUCTURAL STOOP
NOT TO SCALE

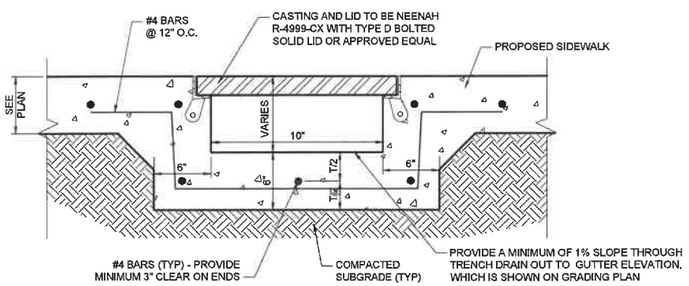

A3 SIDEWALK TRENCH DRAIN
NOT TO SCALE

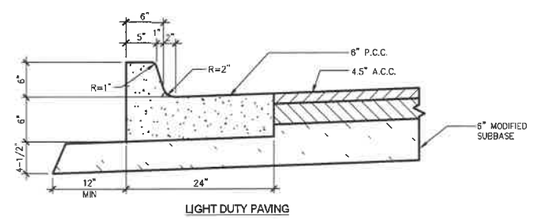

C3 PCC CURB AND GUTTER
NOT TO SCALE

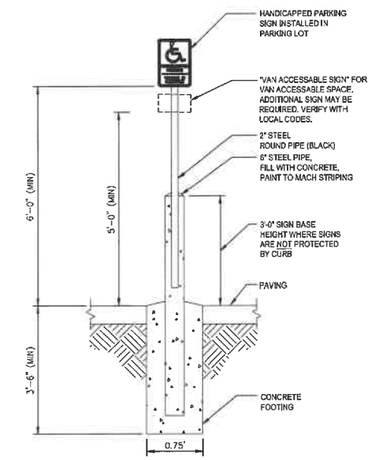

E3 HANDICAP SIGN INSTALLATION DETAIL
NOT TO SCALE

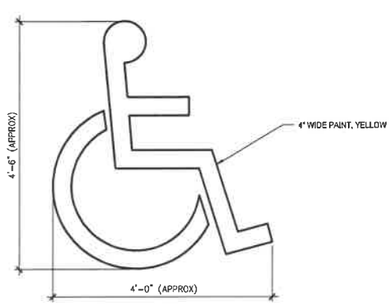

A4 HANDICAP SYMBOL
NOT TO SCALE

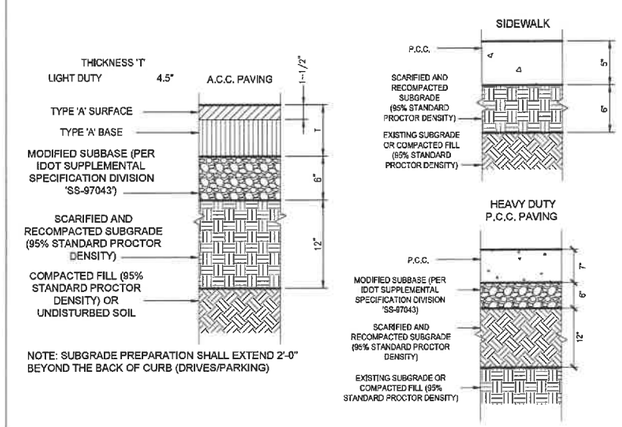

NOTE: SUBGRADE PREPARATION SHALL EXTEND 2'-0" BEYOND THE BACK OF CURB (DRIVES/PARKING)

C4 PAVING SECTIONS
NOT TO SCALE

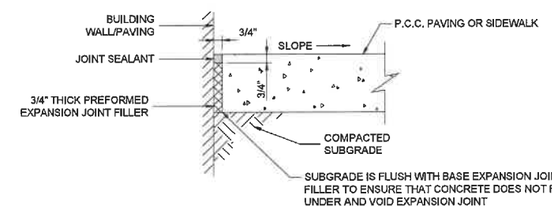

NOTE: ALL PREFORMED JOINT MATERIAL SHALL BE INSTALLED PERPENDICULAR TO THE PAVEMENT SURFACE AND CARE SHALL BE EXERCISED THROUGHOUT THE CONSTRUCTION OF THE PAVEMENT TO ENSURE THAT SUCH JOINT MATERIAL REMAINS IN PROPER POSITION UPON COMPLETION OF PAVING OPERATION.

E4 ISOLATION JOINT
NOT TO SCALE

SHIVEHATTERY
ARCHITECTURE + ENGINEERING
4125 Westown Pkwy, Suite 100 | West Des Moines, Iowa 50266
515.223.6104 | www.shive-hattery.com
Iowa | Illinois | Indiana

DAVE & BUSTER'S
JORDAN CREEK TOWN CENTER

BROOKFIELD PROPERTIES RETAIL
101 JORDAN CREEK PKWY, WEST DES MOINES, IA 50265

DRAWN: KRW
APPROVED: KAS
ISSUED FOR: CITY APPROVAL
DATE: 04/21/2020
PROJECT NO: 4194004
FIELD BOOK: --
CLIENT NO: --

CONSTRUCTION DETAILS

C504

P:\Projects\194\194000\Submitted\Drawings_CAD\20 CONSTRUCTION\E\E104.dwg
Plotted: 4/21/2020 11:27:45 AM

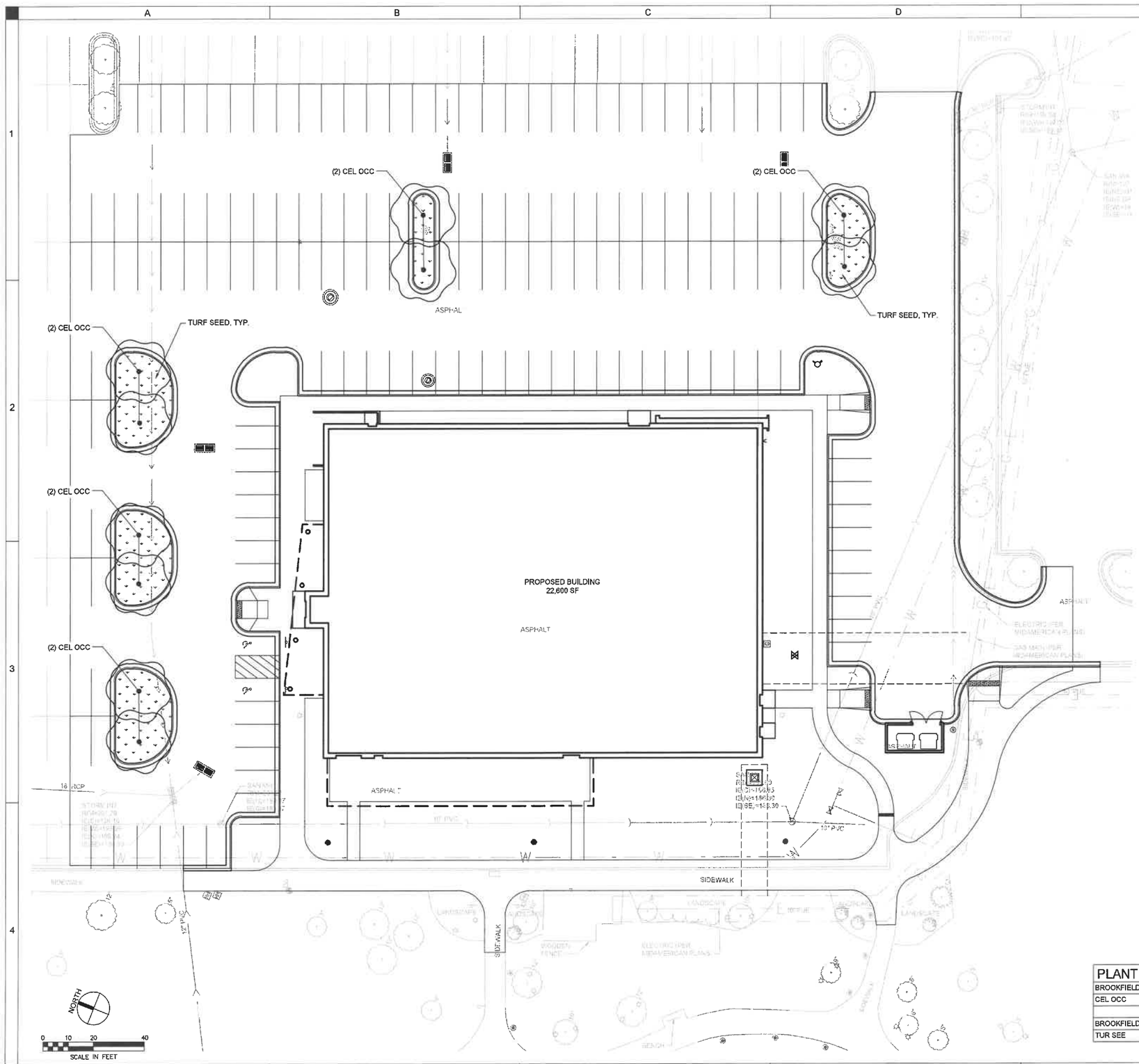

LANDSCAPE NOTES:

1. ALL SITE LANDSCAPING TO BE PROVIDED BY TENANT.
2. ALL TREES SHALL BE PER THE RECOMMENDATIONS AND REQUIREMENTS OF THE CURRENT ANDI 'AMERICAN STANDARDS FOR NURSERY STOCK'.
3. PROTECT ALL EXISTING AND NEW STRUCTURES AND UTILITY SERVICES DURING INSTALLATION OF ALL PLANT MATERIAL. NOTIFY ENGINEER IMMEDIATELY UPON CONFLICT OF PLANTS, STRUCTURES, AND UTILITIES.
4. REPAIR ALL AREAS OF DISTURBANCE WITH TURF SEED UNLESS NOTED OTHERWISE.
5. ISLANDS SHALL BE CORED OUT TO REMOVE ALL GRANULAR AND COMPACTED SUBBASE TO A DEPTH OF 36" BELOW FINISH PAVING SURFACE.

PLANT SCHEDULE

BROOKFIELD SITE PLANTS	QTY	BOTANICAL NAME	COMMON NAME	ROOT	SIZE
CEL OCC	10	Celtis occidentalis	Common Hackberry	B & B	2"Cal
BROOKFIELD SITE GROUNDCOVERS	QTY	BOTANICAL NAME	COMMON NAME	SIZE	
TUR SEE	2,920 sf	Turf Seed	Turf Seed	SF	

SHIVEHATTERY
ARCHITECTURE + ENGINEERING
4125 Westown Pkwy, Suite 100 | West Des Moines, Iowa 50266
515.223.8104 | www.shive-hattery.com
Iowa | Illinois | Indiana

DAVE & BUSTER'S JORDAN CREEK TOWN CENTER

BROOKFIELD PROPERTIES RETAIL
101 JORDAN CREEK PKWY, WEST DES MOINES, IA 50265

DRAWN: EDR
APPROVED: KAS
ISSUED FOR: CITY APPROVAL
DATE: 04/21/2020
PROJECT NO: 41940-0
FIELD BOOK: --
CLIENT NO: --

LANDSCAPE PLAN

L101

Prepared by: B. Portz, City of West Des Moines Development Services, P.O. Box 65320, West Des Moines, IA 50265-0320, 515-222-3620, When Recorded, Return to: City Clerk, City of West Des Moines, P. O. Box 65320, West Des Moines, IA 50265-0320

RESOLUTION

A RESOLUTION OF THE CITY COUNCIL OF THE CITY OF WEST DES MOINES, APPROVING THE PRELIMINARY PLAT OF LOT 18, JORDAN CREEK TOWN CENTER REPLAT 1 (PP-004654-2020) TO CREATE ONE COMMERCIAL LOT AND APPROVAL OF A SITE PLAN TO ALLOW CONSTRUCTION OF A BUILDING PAD FOR THE FUTURE CONSTRUCTION OF A 22,600 SQUARE FOOT ENTERTAINMENT FACILITY ALONG WITH PARKING LOT MODIFICATIONS AND LANDSCAPING.

WHEREAS, pursuant to the provisions of Title 10, and Title 9, Chapter 1 et seq, of the West Des Moines Municipal Code, the applicant, Brookfield Properties Retail, on behalf of the owner, Jordan Creek Town Center, LLC, has requested approval for a Preliminary Plat (PP-004654-2020) for that approximately 37,000 square foot site located at 170 S. Jordan Creek Parkway for the purpose of subdividing the property into one lot for commercial development and has requested approval of a Site Plan (SP-004660-2020) to construct a building pad for the future construction of a 22,600 square foot entertainment facility along with parking lot modifications and landscaping;

Legal Description of Property

A PARCEL OF LAND LOCATED IN LOT 18 JORDAN CREEK TOWN CENTER REPLAT 1, AN OFFICIAL PLAT, NOW IN AND FORMING A PART OF WEST DES MOINES, DALLAS COUNTY, IOWA MORE PARTICULARLY DESCRIBED AS FOLLOWS:

COMMENCING AT THE SOUTHWEST CORNER OF LOT 5 JORDAN CREEK TOWN CENTER REPLAT 1; THENCE SOUTH 82°51'58" WEST, FOR A DISTANCE OF 468.86 FEET TO THE POINT-OF-BEGINNING; THENCE NORTH 22°00'00" WEST, FOR A DISTANCE OF 214.98 FEET; THENCE SOUTH 68°00'00" WEST, FOR A DISTANCE OF 162.00 FEET; THENCE SOUTH 22°00'00" EAST, FOR A DISTANCE OF 246.78 FEET TO A CURVE CONCAVE NORTHEASTERLY WITH A RADIUS OF 15.00 FEET; THENCE ALONG SAID CURVE WHOSE CHORD BEARS SOUTH 67°00'00" EAST, WITH A CHORD LENGTH OF 21.21 FEET, FOR A DISTANCE OF 23.56 FEET; THENCE NORTH 68°00'00" EAST, FOR A DISTANCE OF 40.50 FEET; THENCE NORTH 22°00'00" WEST, FOR A DISTANCE OF 46.80 FEET; THENCE NORTH 68°00'00" EAST, FOR A DISTANCE OF 106.50 FEET TO THE POINT-OF-BEGINNING. CONTAINING 37,375 SQUARE FEET (0.858 ACRES) MORE OR LESS.

WHEREAS, studies and investigations were made, and staff reports and recommendations were submitted which is made a part of this record and herein incorporated by reference; and

WHEREAS, on April 27, 2020, the Plan and Zoning Commission did recommend to the City Council approval of the Preliminary Plat (PP-004654-2020); and

WHEREAS, on April 27, 2020, the Plan and Zoning Commission did recommend to the City Council

approval of the Site Plan (SP-004660-2020); and

WHEREAS, on, May 4, 2020, this City Council held a duly noticed meeting to consider the application for Preliminary Plat/Site Plan (PP-004654-2020/SP-004660-2020).

NOW, THEREFORE, THE CITY COUNCIL OF THE CITY OF WEST DES MOINES DOES RESOLVE AS FOLLOWS:

SECTION 1. The findings, for approval, stated in the staff report, dated May 4, 2020, or as amended orally at the City Council meeting of May 4, 2020, are adopted.

SECTION 2. **PRELIMINARY PLAT** (PP-004654-2020) to create one lot and **SITE PLAN** (SP-004660-2020) to allow construction of a building pad for the future construction of a 22,600 square foot entertainment facility along with parking lot modifications and landscaping is approved, subject to compliance with all the conditions in the staff report, dated May 4, 2020, including conditions added at the Hearing, and attached hereto as Exhibit "A". Violation of any such conditions shall be grounds for revocation of the entitlement, as well as any other remedy which is available to the City.

PASSED AND ADOPTED on May 4, 2020.

_____
Steven K. Gaer
Mayor

ATTEST:

_____
Ryan Jacobson
City Clerk

I HEREBY CERTIFY that the foregoing resolution was duly adopted by the City Council of the City of West Des Moines, Iowa, at a regular meeting held on May 4, 2020, by the following vote:

ATTEST:

_____
Ryan Jacobson
City Clerk

EXHIBIT "A"
CONDITIONS OF APPROVAL

1. This approval only allows for issuance of a building permit for footings and foundation and private utilities. No above ground building construction is permitted on the site until the building elevations and foundation landscaping are approved by the City.

2. Grease interceptor locations and connections are not approved with this review. The grease interceptor locations and connections will be reviewed with the building elevations and foundation landscaping review.