CITY OF WEST DES MOINES
STAFF REPORT COMMUNICATION

Meeting Date: March 18, 2024

ITEM: Raccoon River Greenway Boat Access, 104 S. 1st Street – Approve Site Plan to allow construction of access to Raccoon River – City of West Des Moines – SP-006244-2023

Resolution: Approval of Site Plan

Background: The City of West Des Moines Parks and Recreation Department requests approval of a Site Plan for the approximately 19-acre property located at 104 S. 1st Street. The applicant proposes construction of paved boat launch access to the Raccoon River along with an associated parking lot. The site plan also includes future trails on the site that will connect to other trails in the area.

Staff Review & Comment:

- *Financial Impact:* Construction of the proposed site improvements will be administered by the City of West Des Moines Parks and Recreation Department and funded through a combination of funds budgeted through the City's Capital Improvement Program, awarded grant funding, and a cost-share agreement with Polk County Conservation Board.

- *History:* The City of West Des Moines acquired the 19-acre parcel via donation from AFT, LLC in 2020. This area had originally been identified as a greenway resource in the City's quality of life initiative referred to as the Five Waters Project. Proposed improvements identified through a master planning effort completed in 2023 include an ICON water trails access point, paved and nature trails, and land preservation/restoration. Prior to the City acquiring the land, there is evidence that the site had at one point been used as an access point for a former sand and gravel pit located to the west of the property. Currently the site is vacant and generally consists of bottomland forest.

- *Key Development Aspects:*
  1. Floodplain Development: The proposed boat access will be located within the floodway and floodplain of the Raccoon River. Approvals from Iowa Department of Natural Resources Floodplain, Iowa Department of Natural Resources Sovereign Lands, U.S. Army Corps of Engineers Section 404, and the West Des Moines Floodplain Administrator are required for this work to occur. A condition of approval is recommended requiring these approvals prior to the start of construction.

  2. Site Access: S. 1st Street is an access-controlled State highway. The proposed driveway is shown at the same location as the existing full access north of the Raccoon River Bridge. Access locations are subject to permitting and approval by the Iowa Department of Transportation.

- *Traffic Impact Study Findings:* The proposed site is expected to generate less traffic compared to what was previously assumed in long-range traffic models for the area. Therefore, there is no additional loading on the planned roadway network and previous recommendations for major roadways in the area remain adequate.

  S. 1st Street (also known as State Highway 28 and 63rd Street in Des Moines) is a 4-lane major arterial street with a raised median adjacent to the site. Traffic volumes on S. 1st Street are expected to rise over time as vacant areas continue to fill in and as the area south of the Raccoon River develops. Traffic growth is compounded since the 1st Street corridor acts as a funnel for

drivers traveling from one side of the river to the other, as the nearest alternatives to cross the river are Interstate 35 (about 4 miles west) and Fleur Drive (about 3 miles east).

Levels of service (LOS) for traffic exiting the driveway is forecasted to be at LOS F with the existing traffic levels on S. 1st Street, and delay will continue to worsen as background traffic volumes increase. There may be times during peak periods when the northbound traffic queue stopped at Lincoln Street may back up through the driveway, creating additional delay. Drivers may be forced to wait longer than desired for an acceptable gap or use an alternate route, such as turning right and making a U-turn. The intersection is not expected to meet signalization warrants based on the forecasted traffic volumes. If crashes become an issue in the future, modifying the intersection to restrict left-turns (such as a right-in/right-out or a 3/4 intersection with right-in/right-out/left-in) may be considered to improve safety.

- *Developer Responsibilities:* In conjunction with site development, the developer will be responsible for construction and/or installation of all required public and private infrastructure improvements necessary to support development. The following items are known improvements:
  - Turn Lanes: In order to accommodate the proposed access, the existing pavement markings on S. 1st Street will need to be modified to provide dedicated left-turn lanes on S. 1st Street. Markings will need to be approved by the Iowa Department of Transportation. A condition of approval is recommended requiring approval by IDOT prior to the start of construction.
- *Vesting of Entitlement:* Per City Code, entitlement (approval to construct or implement) shall remain in effect so long as substantial site work has progressed beyond grading and completion of structural foundations and twenty-five percent (25%) of the total building area has occurred above grade within twenty-four (24) months of the effective date of the approval, unless a greater time period is authorized at time of the original entitlement, or by approval of an extension of the original entitlement. It is the responsibility of the developer to be aware of this deadline and request an extension of the approval prior to the expiration date.

Outstanding Issues: There are no outstanding issues.

Planning and Zoning Commission Action:

Date:	March 11, 2024
Vote:	4-0, for approval with Commissioners Conlin, McCoy, Shaw absent
Recommendation:	Approval of a Phased Site Plan

Recommendation: Approve the Site Plan request, subject to the applicant meeting all City Code requirements, and the following conditions of approval:

1. Prior to initiating construction, the applicant obtaining Iowa Department of Natural Resources Floodplain, Iowa Department of Natural Resources Sovereign Lands, ~~U.S. Army Corps of Engineers Section 404~~ *(this part of the condition of approval has been satisfied)*, and West Des Moines Floodplain Development approvals and permits.
2. Prior to initiating construction, the applicant obtaining an Iowa Department of Transportation access permit and approval of lane marking modifications.
3. Prior to initiating construction, a complete stormwater pollution prevention plan meeting the requirements of Iowa DNR General Permit No.2 shall be provided to Engineering Services.

Lead Staff Member: **Brian Portz**

Approval Meeting Dates:

Planning and Zoning Commission	March 11, 2024
City Council	March 18, 2024

Staff Report Reviews:

Planning & Zoning Commission	☒ Development Coordinator (or) ☒ Director	☒ Legal Department
City Council	☒ Director ☐ Appropriations/Finance	☒ Legal Department ☐ Agenda Acceptance

Publications (if applicable)

Published In:	Des Moines Register Community Section
Date(s) Published	n/a
Date(s) of Mailed Notices	n/a

Council Subcommittee Review (if applicable)

Subcommittee	Development & Planning			
Date Reviewed	11/20/23			
Recommendation	Yes ☐	No ☐	Split ☐	No Discussion ☒

Location Map

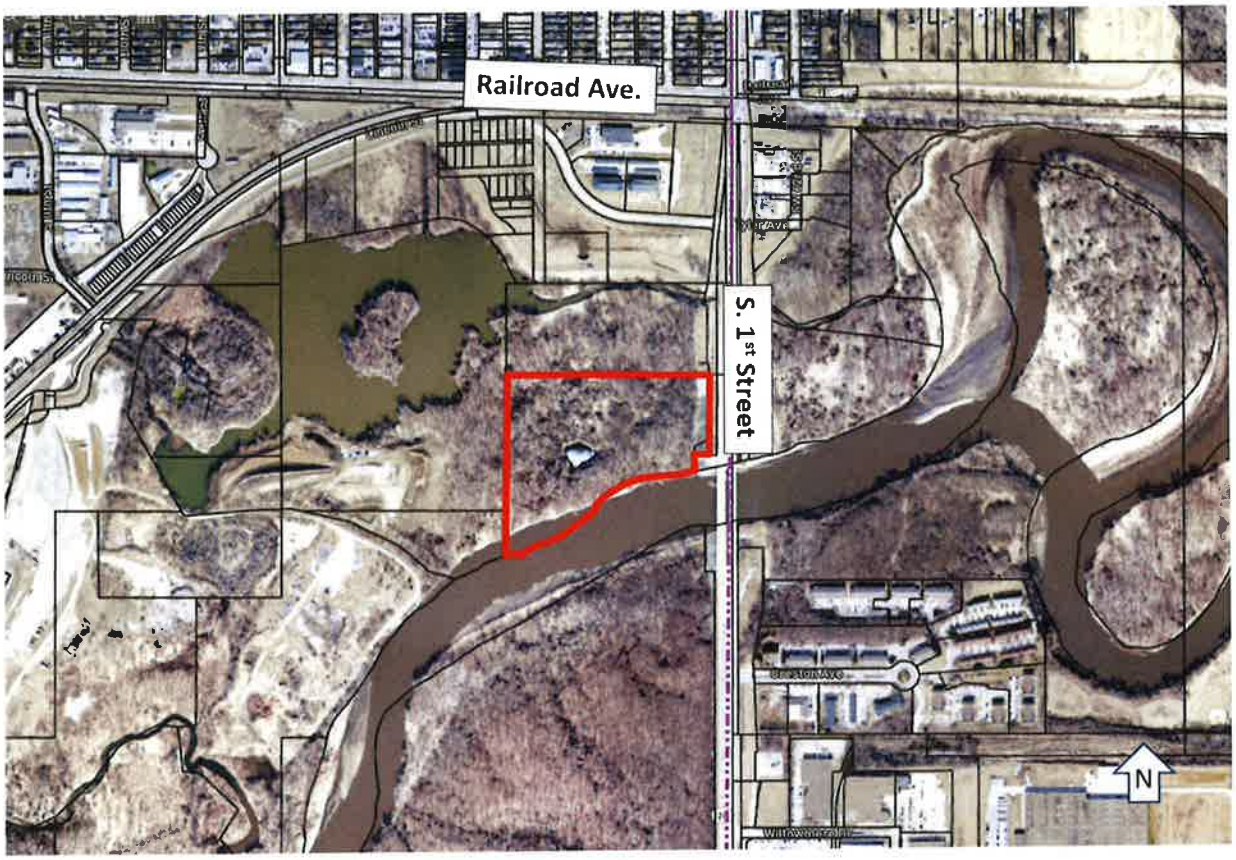

Vicinity Map – Land Uses

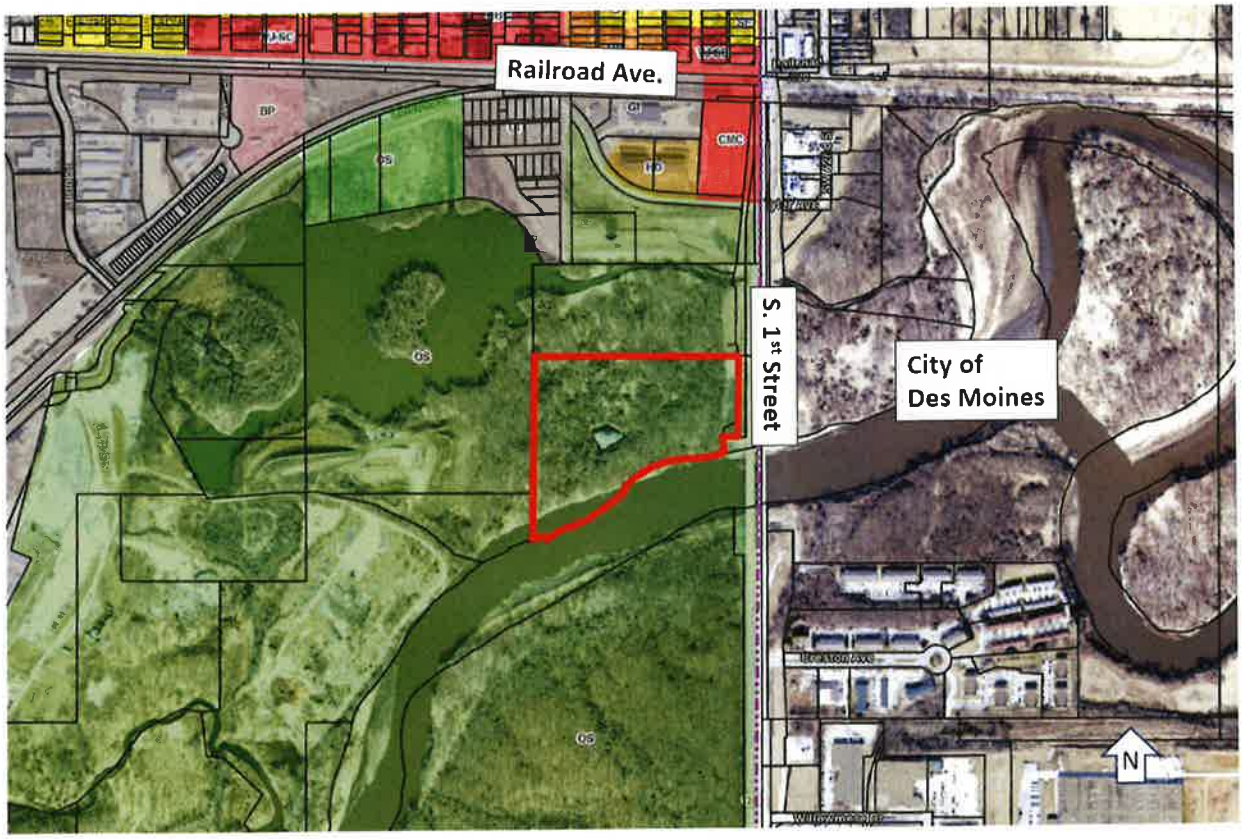

A RESOLUTION OF THE PLANNING AND ZONING COMMISSION

NO. PZC-24-011

WHEREAS, pursuant to the provisions of Title 9, Zoning of the West Des Moines Municipal Code, the applicant and property owner, the City of West Des Moines, requests approval of the Site Plan for the approximately 19-acre property located at 104 S. 1st Street as depicted on the location map included in the staff report. The applicant requests approval to construct paved river access to Raccoon River along with an associated parking lot and other associated site improvements; and

WHEREAS, the Site Plan request complies with the findings stated in the applicable provisions of Title 9, the Comprehensive Plan and City Code.

NOW THEREFORE, the Planning and Zoning Commission of the City of West Des Moines recommends the City Council approve the Site Plan (SP-006244-2023), subject to compliance with all the conditions of approval as stated in the staff report, including conditions added at the meeting, and attached hereto as Exhibit "A", if applicable.

PASSED AND ADOPTED on March 11, 2024.

Kevin Crowley

~~Andrew Conlin,~~ Chair Acting
Planning and Zoning Commission

I HEREBY CERTIFY that the foregoing resolution was duly adopted by the Planning and Zoning Commission of the City of West Des Moines, Iowa, at a regular meeting on March 11, 2024, by the following vote:

AYES: Costa, Crowley, Davis, Hatfield

NAYS:

ABSTENTIONS:

ABSENT: Conlin, McCoy, Shaw

ATTEST: Jennifer Canaday
Recording Secretary

Prepared by: Brian Portz, City of West Des Moines Development Services Dept., PO Box 65320, West Des Moines, Iowa 50265-0320 515-222-3620
When Recorded, Return to: City Clerk, City of West Des Moines, PO Box 65320, West Des Moines, IA 50265-0320

RESOLUTION

A RESOLUTION OF THE CITY COUNCIL OF THE CITY OF WEST DES MOINES, APPROVING A SITE PLAN TO ALLOW CONSTRUCTION OF PAVED RIVER ACCESS AND ASSOCIATED PARKING LOT

WHEREAS, pursuant to the provisions of Title 9, Zoning, of the West Des Moines Municipal Code, the applicant and property owner, the City of West Des Moines, requests approval of the Raccoon River Greenway Boat Access Site Plan for that property located at 104 S. 1st Street and legally described in attached Exhibit "B" for the purpose of constructing paved river access to Raccoon River along with an associated parking lot and other associated site improvements; and

WHEREAS, studies and investigations were made, and staff reports, and recommendations were submitted which is made a part of this record and herein incorporated by reference; and

WHEREAS, the Site Plan complies with findings stated in the applicable provisions of Title 9, Chapter 1, Subsection 8, the Comprehensive Plan and City Code; and

WHEREAS, on March 11, 2024, the Planning and Zoning Commission recommended to the City Council, by a 4-0 vote, for approval of the Site Plan; and

WHEREAS, on this day the City Council held a duly noticed meeting to consider the application for the Site Plan.

NOW, THEREFORE, The City Council does approve the Raccoon River Greenway Boat Access Site Plan (SP-006244-2023), subject to compliance with all of the conditions of approval, including any conditions added at the meeting, attached hereto as Exhibit "A". Violation of any such conditions shall be grounds for revocation of the permit, as well as any other remedy which is available to the City.

PASSED AND ADOPTED on March 18, 2024.

_____
Russ Trimble, Mayor

ATTEST:

_____

Ryan Jacobson, City Clerk

I HEREBY CERTIFY that the foregoing resolution was duly adopted by the City Council of the City of West Des Moines, Iowa, at a regular meeting held on March 18, 2024, by the following vote.

Exhibit A: Conditions of Approval

1. Prior to initiating construction, the applicant obtaining Iowa Department of Natural Resources Floodplain, Iowa Department of Natural Resources Sovereign Lands, ~~U.S. Army Corps of Engineers Section 404, *(this part of the condition of approval has been satisfied)*~~ and West Des Moines Floodplain Development approvals and permits.
2. Prior to initiating construction, the applicant obtaining an Iowa Department of Transportation access permit and approval of lane marking modifications.
3. Prior to initiating construction, a complete stormwater pollution prevention plan meeting the requirements of Iowa DNR General Permit No.2 shall be provided to Engineering Services.

Exhibit B: Legal Description

THAT PART OF LOT 7 LYING WEST OF 63RD STREET (EXCEPT THE NORTH 530 FEET THEREOF AND EXCEPT THE EAST 90 FEET OF THE SOUTH 470 FEET OF THE NORTH 1000 FEET THEREOF AND ALSO EXCEPT THE EAST 220 FEET OF THE SOUTH 320 FEET THEREOF AND ALSO EXCEPT THAT PART OF LOT 7 CONVEYED TO THE STATE OF IOWA IN BOOK 6613 PAGE 551 RECORDED AUGUST 7, 1992) IN OFFICIAL PLAT OF GOVERNMENT LOTS 2, 3 AND 4 AND THE NE¼ OF THE NW¼ OF SECTION 14 TOWNSHIP 78 NORTH RANGE 25 WEST OF THE 5TH P.M., NOW INCLUDED IN AND FORMING A PART OF THE CITY OF WEST DES MOINES, POLK COUNTY, IOWA., CONTAINING APPROXIMATELY 19.329 ACRES.

PLANS INCLUDED ARE FOR ILLUSTRATIVE PURPOSES ONLY – APPROVED PLANS ON FILE WITH THE CITY

CITY OF WEST DES MOINES

RACCOON RIVER GREENWAY BOAT ACCESS

WEST DES MOINES, IOWA

CONSTRUCTION PLANS

ISG PROJECT # 21-26274

LEGEND

EXISTING

- RIGHT OF WAY LINE
- PROPERTY / LOTLINE
- WATER EDGE
- FENCE LINE
- CULVERT
- OVERHEAD ELECTRIC
- UNDERGROUND ELECTRIC
- OVERHEAD UTILITY
- 990 CONTOUR (MAJOR)
- 989 CONTOUR (MINOR)
- DECIDUOUS TREE
- TREE LINE
- POWER POLE
- UTILITY PEDESTAL / CABINET

PROPOSED

- LOT LINE
- RIGHT OF WAY
- CULVERT
- STORM SEWER
- UNDERGROUND ELECTRIC
- 1015 CONTOUR
- LIGHT FIXTURE

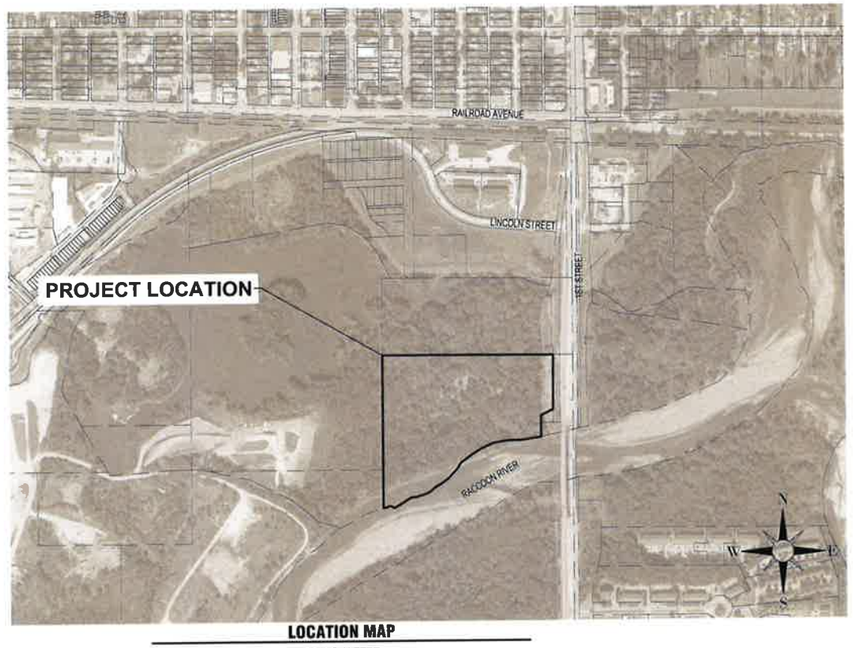

LOCATION MAP

SCALE IN FEET 0 500 1000

SHEET INDEX

C0-10	TITLE SHEET
C0-11	ESTIMATED QUANTITIES
C0-12	ESTIMATE REFERENCE INFORMATION
C0-20	SITE DETAILS
C0-21	SITE DETAILS
C0-22	SITE DETAILS
C0-23	SITE DETAILS
C0-24	SITE DETAILS
C0-30	SECTIONS
C0-31	SECTIONS
C1-10	SWPPP NOTES
C1-11	SWPPP DETAILS
C1-20	SWPPP PLAN
C1-21	SWPPP PLAN
C2-10	EXISTING SITE AND REMOVALS PLAN
C2-11	EXISTING SITE AND REMOVALS PLAN
C2-12	EXISTING SITE AND REMOVALS PLAN
C3-10	SITE PLAN
C3-11	SITE PLAN - PLAZA
C3-20	ACCESS ROAD PLAN AND PROFILE
C3-21	ACCESS ROAD PLAN AND PROFILE
C4-10	OVERALL GRADING PLAN
C4-11	DETAILED GRADING PLAN
C4-12	DETAILED GRADING PLAN
C4-13	DETAILED GRADING PLAN
C5-10	SITE RESTORATION PLAN
C5-20	PLANTING PLAN
C5-30	PLANTING NOTES & DETAILS
E2-00	ELECTRICAL SITE PLAN - ACCESS ROAD
E2-01	ELECTRICAL SITE PLAN - PARKING
E2-02	ELECTRICAL SITE PLAN - STREET
E2-10	PHOTOMETRIC PLAN - PARKING
E2-11	PHOTOMETRIC PLAN - STREET
E2-20	ELECTRICAL DETAILS
E2-21	LIGHTING CUT SHEETS

SEAL

LICENSED PROFESSIONAL ENGINEER ERIC GJERSVIK 16913 IOWA

I hereby certify that this engineering document was prepared by me or under direct personal supervision and that I am a duly licensed Professional Engineer under the laws of the State of Iowa.

PRELIMINARY

(signature) (date)

Printed or typed name ERIC GJERSVIK

License number 16913

My license renewal date is December 31, 12/31/2025

Pages or sheets covered by this seal: C SHEETS

PROJECT GENERAL NOTES

1. ALL WORK SHALL CONFORM TO THE CONTRACT DOCUMENTS, WHICH INCLUDE, BUT ARE NOT LIMITED TO, THE OWNER - CONTRACTOR AGREEMENT, THE PROJECT MANUAL (WHICH INCLUDES GENERAL SUPPLEMENTARY CONDITIONS AND SPECIFICATIONS), DRAWINGS OF ALL DISCIPLINES AND ALL ADDENDA, MODIFICATIONS AND CLARIFICATIONS ISSUED BY THE ARCHITECT/ENGINEER.
2. CONTRACT DOCUMENTS SHALL BE ISSUED TO ALL SUBCONTRACTORS BY THE GENERAL CONTRACTOR IN COMPLETE SETS IN ORDER TO ACHIEVE THE FULL EXTENT AND COMPLETE COORDINATION OF ALL WORK.
3. WRITTEN DIMENSIONS TAKE PRECEDENCE OVER SCALED DIMENSIONS. NOTIFY ARCHITECT/ENGINEER OF ANY DISCREPANCIES OR CONDITIONS REQUIRING INFORMATION OR CLARIFICATION BEFORE PROCEEDING WITH THE WORK.
4. FIELD VERIFY ALL EXISTING CONDITIONS AND DIMENSIONS. NOTIFY ARCHITECT/ENGINEER OF ANY DISCREPANCIES OR CONDITIONS REQUIRING INFORMATION OR CLARIFICATION BEFORE PROCEEDING WITH THE WORK.
5. DETAILS SHOWN ARE INTENDED TO BE INDICATIVE OF THE PROFILES AND TYPE OF DETAILING REQUIRED THROUGHOUT THE WORK. DETAILS NOT SHOWN ARE SIMILAR IN CHARACTER TO DETAILS SHOWN. WHERE SPECIFIC DIMENSIONS, DETAILS OR DESIGN INTENT CANNOT BE DETERMINED, NOTIFY ARCHITECT/ENGINEER BEFORE PROCEEDING WITH THE WORK.
6. ALL MANUFACTURED ARTICLES, MATERIALS AND EQUIPMENT SHALL BE APPLIED, INSTALLED, CONNECTED, ERECTED, CLEANED AND CONDITIONED ACCORDING TO MANUFACTURERS' INSTRUCTIONS. IN CASE OF DISCREPANCIES BETWEEN MANUFACTURERS' INSTRUCTIONS AND THE CONTRACT DOCUMENTS, NOTIFY ARCHITECT/ENGINEER BEFORE PROCEEDING WITH THE WORK.
7. ALL DISSIMILAR METALS SHALL BE EFFECTIVELY ISOLATED FROM EACH OTHER TO AVOID GALVANIC CORROSION.
8. THE LOCATION AND TYPE OF ALL INPLACE UTILITIES SHOWN ON THE PLANS ARE FOR GENERAL INFORMATION ONLY AND ARE ACCURATE AND COMPLETE TO THE BEST OF THE KNOWLEDGE OF I & S GROUP, INC. (ISG). NO WARRANTY OR GUARANTEE IS IMPLIED. THE CONTRACTOR SHALL VERIFY THE SIZES, LOCATIONS AND ELEVATIONS OF ALL INPLACE UTILITIES PRIOR TO CONSTRUCTION. CONTRACTOR SHALL IMMEDIATELY NOTIFY ENGINEER OF ANY DISCREPANCIES OR VARIATIONS FROM PLAN.
9. THE CONTRACTOR IS TO CONTACT "IOWA ONE CALL" FOR UTILITY LOCATIONS, MINIMUM 2 BUSINESS DAYS PRIOR TO ANY EXCAVATION / CONSTRUCTION (1-800-292-8989).
10. AT LEAST ONE WEEK PRIOR TO ANY CONSTRUCTION WITHIN PUBLIC R.O.W./EASEMENTS AND/OR ANY CONNECTION TO PUBLIC SEWERS AND STREETS, THE CONTRACTOR SHALL CONTACT THE WDM ENGINEERING SERVICES BEN MCALISTER 222-3475 TO OBTAIN APPLICABLE CITY PERMITS THAT MAY BE NECESSARY. IT IS IMPORTANT TO NOTE CITY APPROVAL OF THIS PLAN IS SUBJECT TO THE APPLICANT OBTAINING ALL NECESSARY EASEMENTS/AGREEMENTS AND APPLICABLE PERMITS.
11. APPLICANT SHOULD BE MADE AWARE ANY SIGNING, STRIPING OR OTHER TRAFFIC CONTROL DEVICES ON THE DRIVEWAY APPROACHES TO PUBLIC STREETS SHOULD CONFORM TO THE (MUTCD) MANUAL ON UNIFORM TRAFFIC CONTROL DEVICES (FEDERAL HIGHWAY ADMINISTRATION, 2009 EDITION). A NOTE SHALL BE PROVIDED ON THE SITE PLAN INDICATING THIS.

SITE SUMMARY

EXISTING ZONING:	OS (OPEN SPACE)
EXISTING LAND USE:	FLOODPLAIN AND FLOODWAY
EXISTING SITE/LOT AREA:	33 AC.
EXISTING IMPERVIOUS AREA:	0 AC. (0%)
EXISTING GREENSPACE:	33 AC. (100%)
PROPOSED ZONING:	N/A
PROPOSED LAND USE:	PARKING LOT AND BOAT RAMP
PROPOSED SITE/LOT AREA:	33 AC.
PROPOSED IMPERVIOUS AREA:	66,969 SQ. FT / 1.54 AC. (4.6%)
GREENSPACE PROVIDED:	31.46 AC. (95.4%)

PARKING REQUIREMENTS (PER CITY CODE)

TYPE	UNIT / AREA	STALLS REQUIRED	STALLS PROVIDED
9'X18' (17' IF GREEN SPACE ABUTS STALL)	NA		42
	TOTAL:		42

SETBACKS

	PARKING	BUILDING
FRONT YARD		50'-0"
SIDE YARD		50'-0"
REAR YARD		50'-0"

ABBREVIATIONS:

AC	ACRE	CMP	CORRUGATED METAL PIPE	FDC	FIRE DEPARTMENT CONNECTION	HH	HANDHOLE	LSO	LOWEST STRUCTURAL OPENING	PP	POLYPROPYLENE	STA	STATION
ADA	AMERICANS WITH DISABILITIES ACT	CO	CLEANOUT	FDN	FOUNDATION	HORIZ	HORIZONTAL	MAX	MAXIMUM	PSI	POUNDS PER SQUARE INCH	SY	SQUARE YARD
ADD	ADDENDUM	CONC	CONCRETE	FES	FLARED END SECTION	HR	HOUR	MB	MAIL BOX	PVC	POLYVINYL CHLORIDE	T/C	TOP OF CURB
AFF	ABOVE FINISHED FLOOR	CONST	CONSTRUCTION	FFE	FINISHED FLOOR ELEVATION	HWL	HIGH WATER LEVEL	MECH	MECHANICAL	PVMT	PAVEMENT	TEL	TELEPHONE
AGG	AGGREGATE	CONT	CONTINUOUS	FPM	FEET PER MINUTE	HWY	HIGHWAY	MH	MANHOLE	QTY	QUANTITY	TEMP	TEMPORARY
APPROX	APPROXIMATE	CY	CUBIC YARD	FPS	FEET PER SECOND	HYD	HYDRANT	MIN	MINIMUM	R	RIM	THRU	THROUGH
ARCH	ARCHITECT, ARCHITECTURAL	C&G	CURB AND GUTTER	FT	FOOT, FEET	I	INVERT	MISC	MISCELLANEOUS	RAD	RADIUS	TNFH	TOP NUT OF FIRE HYDRANT
BFE	BASEMENT FLOOR ELEVATION	DEMO	DEMOLITION	FTG	FOOTING	ID	INSIDE DIAMETER	NO	NUMBER	RCP	REINFORCED CONCRETE PIPE	TRANS	TRANSFORMER
BIT	BITUMINOUS	DIA	DIAMETER	GA	GAUGE	IN	INCH	NTS	NOT TO SCALE	RD	ROOF DRAIN	TV	TELEVISION
CAD	COMPUTER-AIDED DESIGN	DIM	DIMENSION	GAL	GALLON	INV	INVERT	NWL	NORMAL WATER LEVEL	REBAR	REINFORCING BAR	T/W	TOP OF WALL
CB	CATCH BASIN	DS	DOWNSPOUT	GALV	GALVANIZED	IP	IRON PIPE	OC	ON CENTER	REM	REMOVE	TYP	TYPICAL
CFS	CUBIC FEET PER SECOND	EA	EACH	GC	GENERAL CONTRACTOR	IPS	IRON PIPE SIZE	OCEW	ON CENTER EACH WAY	ROW	RIGHT OF WAY	UT	UTILITY, UNDERGROUND TELEPHONE
CF	CUBIC FOOT	ELEC	ELECTRICAL	GFE	GARAGE FLOOR ELEVATION	J-BOX	JUNCTION BOX	OH	OVERHEAD	R/W	RIGHT OF WAY	VCP	VITRIFIED CLAY PIPE
CI	CAST IRON	ELEV	ELEVATION	GL	GUTTER LINE	JT	JOINT	OHD	OVERHEAD DOOR	SAN	SANITARY	W/O	WITHOUT
CIP	CAST IRON PIPE	EOF	EMERGENCY OVERFLOW	GPM	GALLONS PER MINUTE	LF	LINEAR FEET	OZ	OUNCE	SCH	SCHEDULE	W/	WITH
CIPC	CAST IN PLACE CONCRETE	EQ	EQUAL	GV	GATE VALVE	LIN	LINEAR	PED	PEDESTAL, PEDESTRIAN	SF	SQUARE FOOT	YD	YARD
CJ	CONTROL JOINT	EX	EXISTING	HDPE	HIGH DENSITY POLYETHYLENE	LPS	LOW PRESSURE STEAM	PERF	PERFORATED	SPEC	SPECIFICATION	YR	YEAR
CL	CENTERLINE	F/G	FORM GRADE	HD	HEAVY DUTY	LS	LUMP SUM	PL	PROPERTY LINE	SQ	SQUARE		

PROJECT INDEX:

OWNER:

CITY OF WEST DES MOINES
PARKS & REC DEPT.
4200 MILLS CIVIC PARKWAY
WEST DES MOINES, IOWA 50265
PHONE: 515.222.3600

PROJECT ADDRESS / LOCATION:

104 1ST STREET
WEST DES MOINES, IOWA 50265

MANAGING OFFICE:

DES MOINES OFFICE
217 EAST 2nd STREET
SUITE 110
DES MOINES, IA 50309
PHONE: 515.243.9143

PROJECT MANAGER: ERIC GJERSVIK
EMAIL: ERIC.GJERSVIK@ISGINC.COM

SPECIFICATIONS REFERENCE

ALL CONSTRUCTION SHALL COMPLY WITH THE CITY OF WEST DES MOINES REQUIREMENTS AND WITH THE 2022 EDITION OF THE STATEWIDE URBAN DESIGN AND SPECIFICATIONS (SUDAS) FOR PUBLIC IMPROVEMENTS, UNLESS DIRECTED OTHERWISE.

PROJECT DATUM

HORIZONTAL COORDINATES HAVE BEEN REFERENCED TO THE NORTH AMERICAN DATUM OF 1983 (NAD83), ZONE 8, ON THE IOWA REGIONAL COORDINATE SYSTEM, IN U.S. SURVEY FEET. ELEVATIONS HAVE BEEN REFERENCED TO THE CITY OF WEST DES MOINES DATUM LOWERED BY (773.81) FROM THE NGVD29 ELEVATIONS.

B.M. ELEVATION=38.23

BENCHMARK #058 AT INTERSECTION OF 4TH STREET AND RAILROAD AVENUE, NORTHWEST CORNER OF INTERSECTION, 41 FEET WEST OF CENTERLINE OF 4TH STREET, 55 ± FEET NORTH OF CENTERLINE OF RAILROAD AVENUE.

TOPOGRAPHIC SURVEY

THIS PROJECT'S TOPOGRAPHIC SURVEY CONSISTS OF DATA COLLECTED IN MARCH 2022 BY ISG.

THE CITY OF WEST DES MOINES

IOWA ONE CALL 1-800-292-8989 www.iowaonecall.com 811

NOTE:
THE CLARITY OF THESE PLANS DEPEND UPON COLOR COPIES. IF THIS TEXT DOES NOT APPEAR IN COLOR, THIS IS NOT AN ORIGINAL PLAN SET AND MAY RESULT IN MISINTERPRETATION.

THIS DOCUMENT IS THE PROPERTY OF I & S GROUP, INC. AND MAY NOT BE USED, COPIED OR DUPLICATED WITHOUT PRIOR WRITTEN CONSENT.

PROJECT
CITY OF WEST DES MOINES RACCOON RIVER GREENWAY BOAT ACCESS
WEST DES MOINES IOWA

REVISION SCHEDULE

DATE	DESCRIPTION	BY
01/11/2024	RESUBMITTAL #1	EBG

PROJECT NO.	21-26274
FILE NAME	26274 C0-SITE DATA
DRAWN BY	PCN
DESIGNED BY	PCN
REVIEWED BY	—
ORIGINAL ISSUE DATE	06/23/22
CLIENT PROJECT NO.	-

TITLE
TITLE SHEET

SHEET
C0-10

PRELIMINARY NOT FOR CONSTRUCTION

PRELIMINARY NOT FOR CONSTRUCTION

PLOT DATE: 1/11/2024 12:46 PM

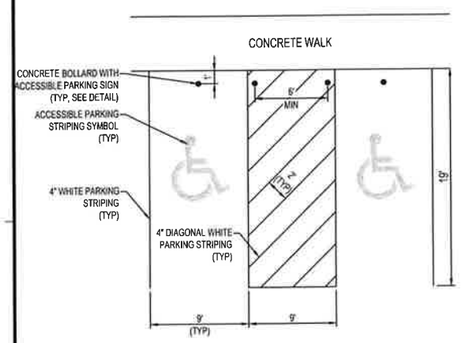

ACCESSIBLE PARKING AREA
NTS

SHOP DRAWING REQUIRED

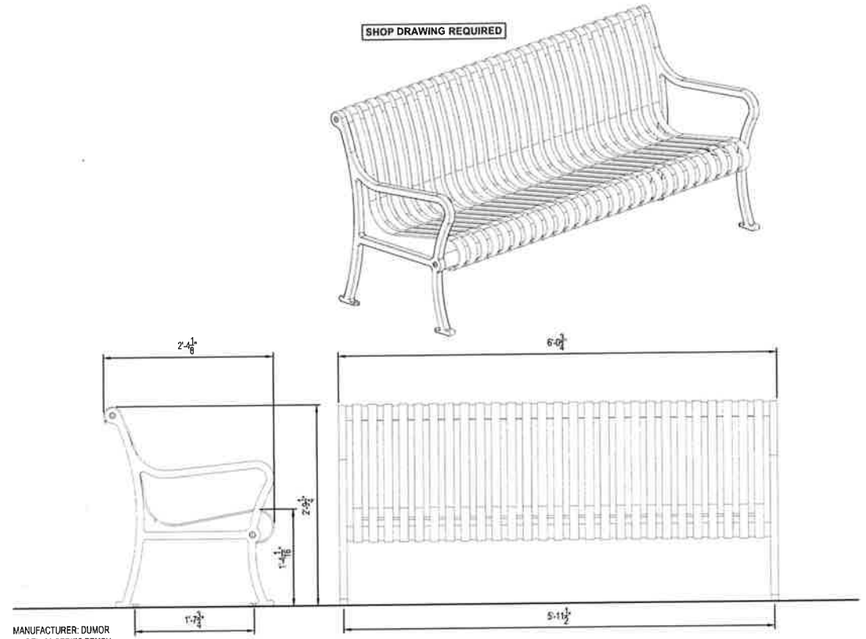

MANUFACTURER: DUMOR
MODEL: 93 SERIES BENCH
FRAME COLOR: BLACK
MOUNTING: SURFACE MOUNT

BENCH
SCALE: 1" = 1'-0"

SHOP DRAWING REQUIRED

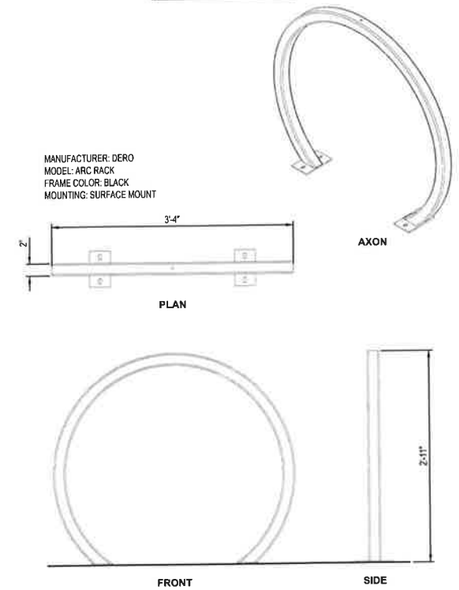

MANUFACTURER: DERO
MODEL: ARC RACK
FRAME COLOR: BLACK
MOUNTING: SURFACE MOUNT

BIKE RACK
SCALE: 1" = 1'-0"

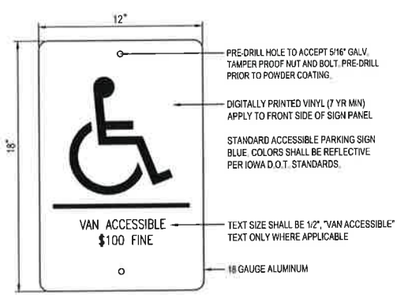

ACCESSIBLE PARKING SIGN
NTS

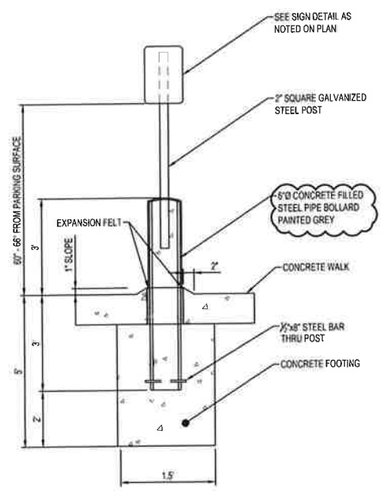

SIGN POST IN BOLLARD
NTS

SHOP DRAWING REQUIRED

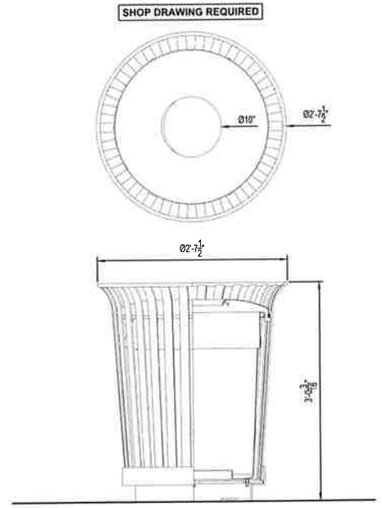

MANUFACTURER: DUMOR
MODEL: 84-32 SERIES RECEPTACLE
PLASTIC LINER: 32 GALLON
FRAME COLOR: BLACK
MOUNTING: SURFACE MOUNT

LITTER RECEPTACLE
SCALE: 1" = 1'-0"

SHOP DRAWING REQUIRED

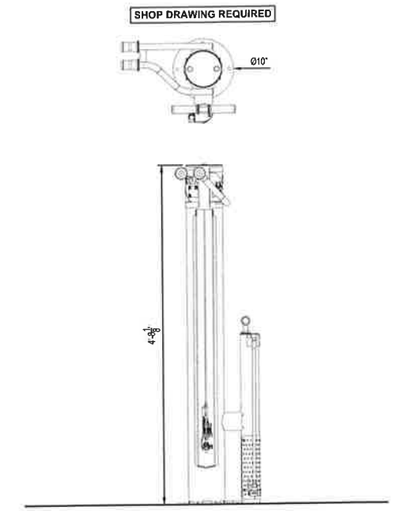

MANUFACTURER: DERO
MODEL: FIXIT PLUS
CAPACITY: 1 BIKE
PUMP: AIR KIT PRIME, ATTACHED TO FIXIT
FRAME COLOR: BLACK
MOUNTING: SURFACE MOUNT

BIKE REPAIR STATION
SCALE: 1" = 1'-0"

ISG

THE CITY OF WEST DES MOINES

NOTE:
THE CLARITY OF THESE PLANS DEPEND UPON COLOR COPIES. IF THIS TEXT DOES NOT APPEAR IN COLOR, THIS IS NOT AN ORIGINAL PLAN SET AND MAY RESULT IN MISINTERPRETATION.

THIS DOCUMENT IS THE PROPERTY OF I & S GROUP, INC. AND MAY NOT BE USED, COPIED OR DUPLICATED WITHOUT PRIOR WRITTEN CONSENT.

PROJECT
CITY OF WEST DES MOINES RACCOON RIVER GREENWAY BOAT ACCESS

WEST DES MOINES IOWA

REVISION SCHEDULE

DATE	DESCRIPTION	BY
01/11/2024	RESUBMITTAL #1	EBG

PROJECT NO.	21-26274
FILE NAME	26274 C0-DETAILS
DRAWN BY	PCN
DESIGNED BY	PCN
REVIEWED BY	—
ORIGINAL ISSUE DATE	08/23/22
CLIENT PROJECT NO.	-

TITLE
SITE DETAILS

SHEET
C0-21

PRELIMINARY NOT FOR CONSTRUCTION

PRELIMINARY NOT FOR CONSTRUCTION

PLOT DATE: 1/11/2024 12:46 PM

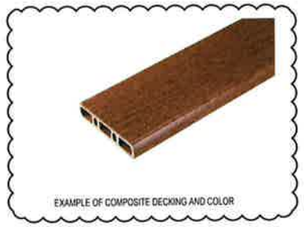

EXAMPLE OF COMPOSITE DECKING AND COLOR

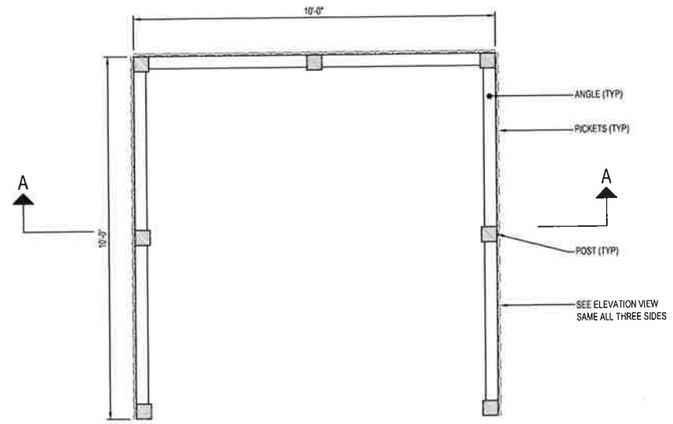

PORTABLE RESTROOM ENCLOSURE (PLAN)
SCALE: 1/2" = 1'-0"

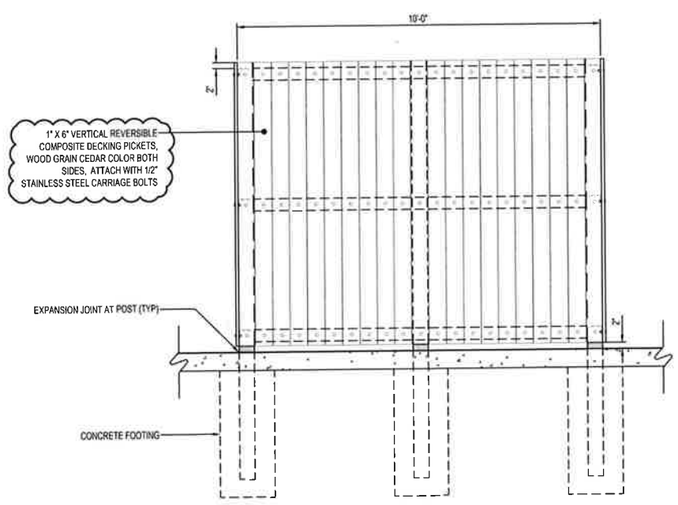

PORTABLE RESTROOM ENCLOSURE (ELEVATION)
SAME ON THREE SIDES
SCALE: 1/2" = 1'-0"

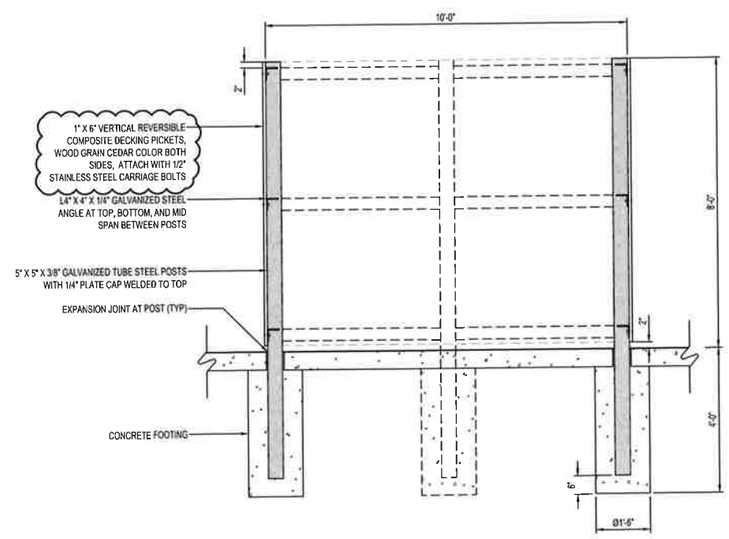

PORTABLE RESTROOM ENCLOSURE (SECTION A-A)
SCALE: 1/2" = 1'-0"

ISG

THE CITY OF WEST DES MOINES

NOTE:
THE CLARITY OF THESE PLANS DEPEND UPON COLOR COPIES. IF THIS TEXT DOES NOT APPEAR IN COLOR, THIS IS NOT AN ORIGINAL PLAN SET AND MAY RESULT IN MISINTERPRETATION.

THIS DOCUMENT IS THE PROPERTY OF I & S GROUP, INC. AND MAY NOT BE USED, COPIED OR DUPLICATED WITHOUT PRIOR WRITTEN CONSENT.

PROJECT
CITY OF WEST DES MOINES RACCOON RIVER GREENWAY BOAT ACCESS

WEST DES MOINES IOWA

REVISION SCHEDULE

DATE	DESCRIPTION	BY
01/11/2024	RESUBMITTAL #1	EBG

PROJECT NO.	21-26274
FILE NAME	26274 C0-DETAILS
DRAWN BY	PCN
DESIGNED BY	PCN
REVIEWED BY	—
ORIGINAL ISSUE DATE	06/23/22
CLIENT PROJECT NO.	-

TITLE
SITE DETAILS

SHEET
C0-22

PRELIMINARY NOT FOR CONSTRUCTION

PRELIMINARY NOT FOR CONSTRUCTION

PLOT DATE: 1/11/2024 12:46 PM

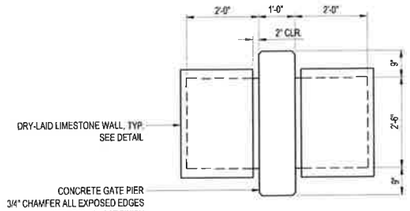

PLAN - GATE POST

SCALE: 1/2" = 1'-0"

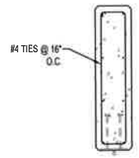

SECTION "D"

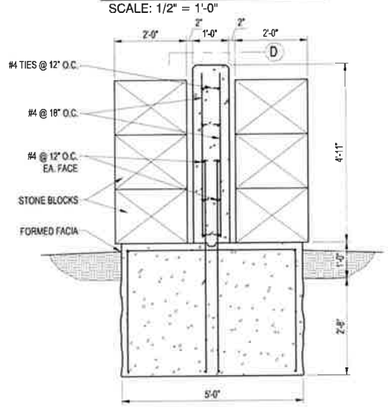

SECTION - GATE POST

SCALE: 1/2" = 1'-0"

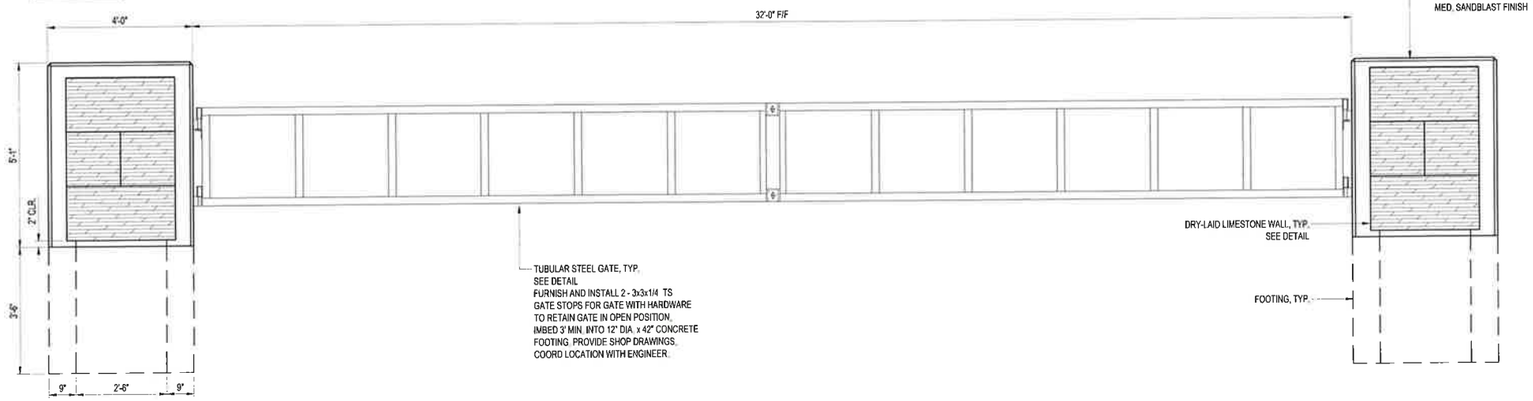

ELEVATION VEHICULAR GATE

SCALE: 1/2" = 1'-0"

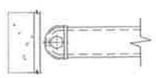

SECTION "A"

SECTION "B"

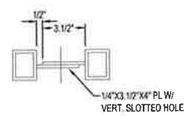

SECTION "C"

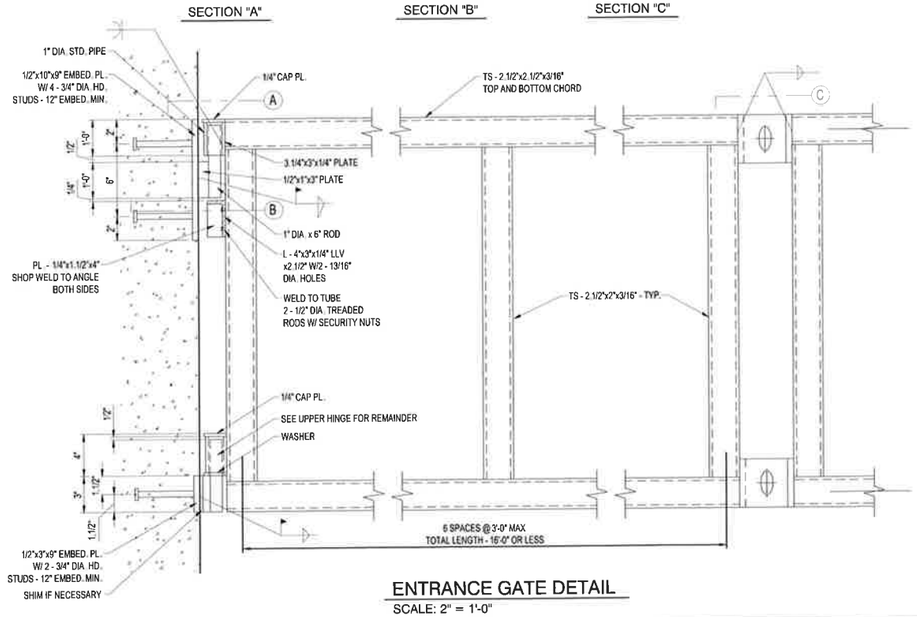

ENTRANCE GATE DETAIL

SCALE: 2" = 1'-0"

PLOT DATE: 1/11/2024 12:46 PM

ISG

THE CITY OF WEST DES MOINES

NOTE:
THE CLARITY OF THESE PLANS DEPEND UPON COLOR COPIES. IF THIS TEXT DOES NOT APPEAR IN COLOR, THIS IS NOT AN ORIGINAL PLAN SET AND MAY RESULT IN MISINTERPRETATION.

THIS DOCUMENT IS THE PROPERTY OF I & S GROUP, INC. AND MAY NOT BE USED, COPIED OR DUPLICATED WITHOUT PRIOR WRITTEN CONSENT.

PROJECT

CITY OF WEST DES MOINES RACCOON RIVER GREENWAY BOAT ACCESS

WEST DES MOINES IOWA

REVISION SCHEDULE

DATE	DESCRIPTION	BY
01/11/2024	RESUBMITTAL #1	EBG

PROJECT NO.	21-26274
FILE NAME	26274 C0-DETAILS
DRAWN BY	PCN
DESIGNED BY	PCN
REVIEWED BY	---
ORIGINAL ISSUE DATE	06/23/22
CLIENT PROJECT NO.	-

TITLE

SITE DETAILS

SHEET

C0-23

PRELIMINARY NOT FOR CONSTRUCTION

PRELIMINARY NOT FOR CONSTRUCTION

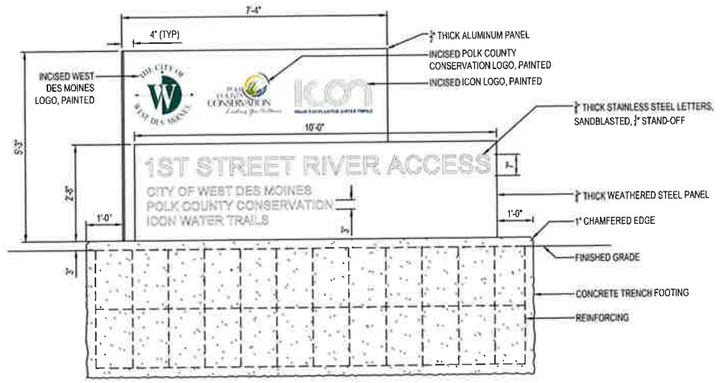

FRONT ELEVATION
SCALE: 1/2" = 1'-0"

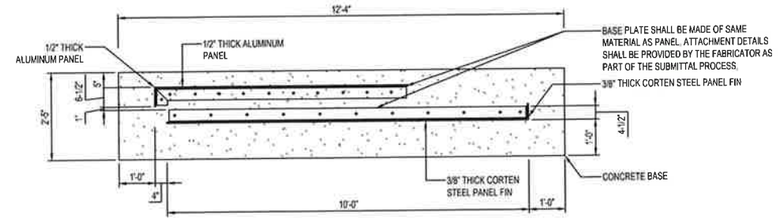

PLAN VIEW
SCALE: 1/2" = 1'-0"

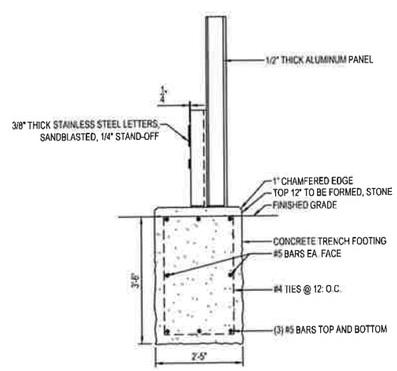

SIDE ELEVATION
SCALE: 1/2" = 1'-0"

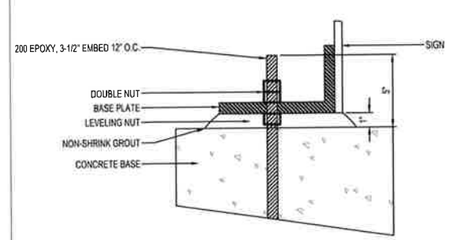

SECTION: BASE PLATE LEVELING DETAIL
SCALE: 1" = 5'-0"

SIGNAGE NOTES AND SPECIFICATIONS

1. ALUMINUM PANEL ALLOY SHALL BE DETERMINED DURING THE SUBMITTAL PROCESS. THE FABRICATOR SHALL BE RESPONSIBLE FOR ILLUSTRATING THE RIGIDITY AND SHAPE TO FORM A CLEAN 90° BEND BY MEANS OF A METAL BRAKE OR WELDED AND SANDED SMOOTH. THE ALUMINUM PANEL SHALL HAVE A SANDBLASTED DULL FINISH.
2. ALL ARTWORK SHALL BE PROVIDED BY OWNER.
3. GROUT SHALL BE NON-SHRINK, NON-METALLIC, NATURAL AGGREGATE, CONSTRUCTION GROUT WITH MINIMUM DRY-PACK COMPRESSIVE STRENGTH OF 7000 PSI AT 3-DAYS COMPLYING WITH ASTM C1107.
4. ALL HARDWARE SHALL BE STAINLESS STEEL.
5. CORTEN STEEL SHALL BE POWER WASHED OR LIGHTLY SANDBLASTED PRIOR TO FABRICATION.
6. LETTERS SHALL BE PERMANENTLY ATTACHED.
7. SIGN WIDTH VARIES. THE CORTEN PANEL IS EITHER 10' OR 8' WIDE.
8. SUBMITTALS
   a. MATERIAL SAMPLES IN CORRECT THICKNESS.
   b. PAINT SPECIFICATIONS.
   c. UP TO 3 COLOR OPTIONS FOR "W" LOGO. PAINT SHALL BE ON ALUMINUM WITH SANDBLASTED FINISH.
   d. CONCRETE DESIGN MIX.
   e. MANUFACTURER'S DATA ON ANCHOR RODS, NUTS.
   f. ONE LETTER IN EACH SIZE, THICKNESS, AND MATERIAL.
   g. SHOP DRAWING DETAILING ATTACHMENT DETAIL OF LETTERS.
   h. ATTACHMENT DETAIL OF BASE PLATE.

ISG

THE CITY OF WEST DES MOINES

NOTE:
THE CLARITY OF THESE PLANS DEPEND UPON COLOR COPIES. IF THIS TEXT DOES NOT APPEAR IN COLOR, THIS IS NOT AN ORIGINAL PLAN SET AND MAY RESULT IN MISINTERPRETATION.

THIS DOCUMENT IS THE PROPERTY OF I & S GROUP, INC. AND MAY NOT BE USED, COPIED OR DUPLICATED WITHOUT PRIOR WRITTEN CONSENT.

PROJECT
CITY OF WEST DES MOINES RACCOON RIVER GREENWAY BOAT ACCESS

WEST DES MOINES IOWA

REVISION SCHEDULE

DATE	DESCRIPTION	BY
01/11/2024	RESUBMITTAL #1	EBG

PROJECT NO.	21-26274
FILE NAME	26274 C0-DETAILS
DRAWN BY	PCN
DESIGNED BY	PCN
REVIEWED BY	---
ORIGINAL ISSUE DATE	06/23/22
CLIENT PROJECT NO.	-

TITLE
SITE DETAILS

SHEET
C0-24

PRELIMINARY NOT FOR CONSTRUCTION

PRELIMINARY NOT FOR CONSTRUCTION

PLOT DATE: 1/11/2024 12:48 PM

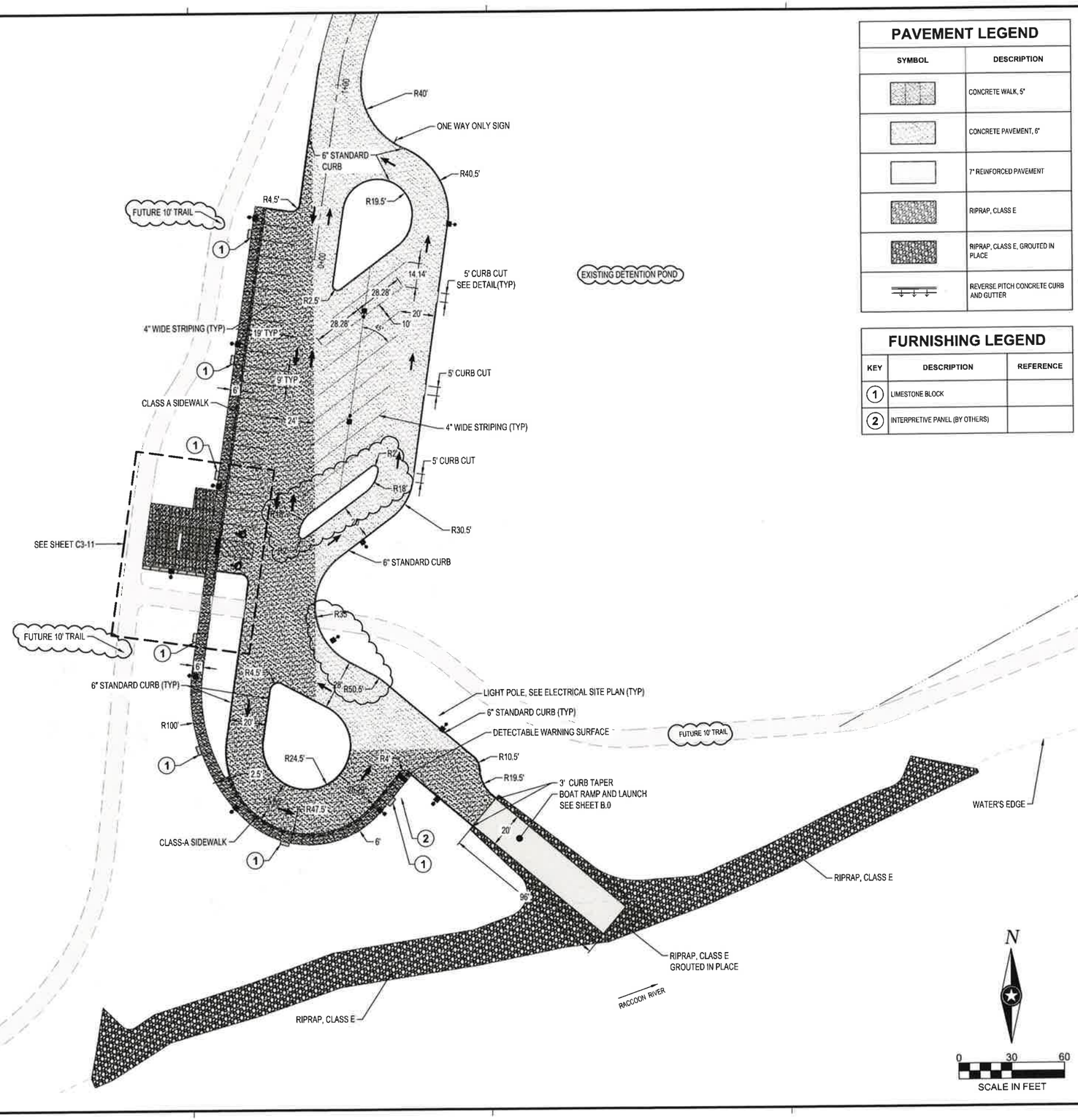

PAVEMENT LEGEND

SYMBOL	DESCRIPTION
	CONCRETE WALK, 5"
	CONCRETE PAVEMENT, 6"
	7" REINFORCED PAVEMENT
	RIPRAP, CLASS E
	RIPRAP, CLASS E, GROUTED IN PLACE
	REVERSE PITCH CONCRETE CURB AND GUTTER

FURNISHING LEGEND

KEY	DESCRIPTION	REFERENCE
1	LIMESTONE BLOCK	
2	INTERPRETIVE PANEL (BY OTHERS)	

ISG

THE CITY OF WEST DES MOINES

NOTE:
THE CLARITY OF THESE PLANS DEPEND UPON COLOR COPIES. IF THIS TEXT DOES NOT APPEAR IN COLOR, THIS IS NOT AN ORIGINAL PLAN SET AND MAY RESULT IN MISINTERPRETATION.

THIS DOCUMENT IS THE PROPERTY OF I & S GROUP, INC. AND MAY NOT BE USED, COPIED OR DUPLICATED WITHOUT PRIOR WRITTEN CONSENT.

PROJECT

CITY OF WEST DES MOINES RACCOON RIVER GREENWAY BOAT ACCESS

WEST DES MOINES IOWA

REVISION SCHEDULE

DATE	DESCRIPTION	BY
01/11/2024	RESUBMITTAL #1	EBG

PROJECT NO.	21-26274
FILE NAME	26274 C3-SITE
DRAWN BY	PCN
DESIGNED BY	PCN
REVIEWED BY	—
ORIGINAL ISSUE DATE	06/23/22
CLIENT PROJECT NO.	-

TITLE

SITE PLAN

SHEET

C3-10

PRELIMINARY NOT FOR CONSTRUCTION

PRELIMINARY NOT FOR CONSTRUCTION

PLOT DATE: 1/11/2024 12:58 PM

FURNISHING LEGEND

KEY	DESCRIPTION	REFERENCE
1	LIMESTONE BLOCK	
2	LITTER RECEPTACLE	
3	BIKE RACK	
4	BIKE REPAIR STATION	
5	PORTABLE RESTROOM ENCLOSURE	
6	TRAIL KIOSK (BY OTHERS)	

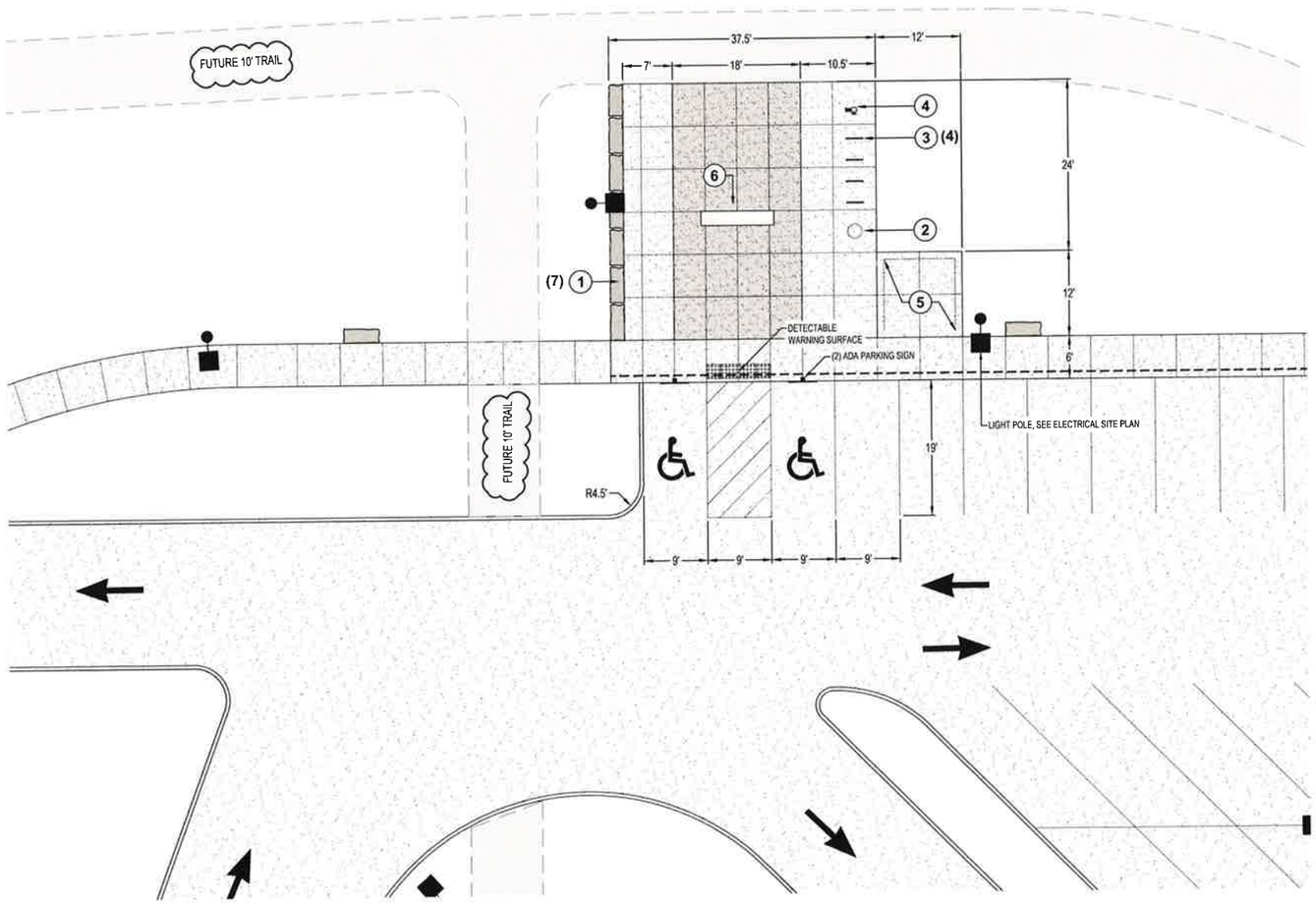

0 10 20
SCALE IN FEET

ISG

THE CITY OF WEST DES MOINES

NOTE:
THE CLARITY OF THESE PLANS DEPEND UPON COLOR COPIES. IF THIS TEXT DOES NOT APPEAR IN COLOR, THIS IS NOT AN ORIGINAL PLAN SET AND MAY RESULT IN MISINTERPRETATION.

THIS DOCUMENT IS THE PROPERTY OF I & S GROUP, INC. AND MAY NOT BE USED, COPIED OR DUPLICATED WITHOUT PRIOR WRITTEN CONSENT.

PROJECT
CITY OF WEST DES MOINES RACCOON RIVER GREENWAY BOAT ACCESS

WEST DES MOINES IOWA

REVISION SCHEDULE

DATE	DESCRIPTION	BY
01/11/2024	RESUBMITTAL #1	EBG

PROJECT NO.	21-26274
FILE NAME	26274 C3-SITE
DRAWN BY	PCN
DESIGNED BY	PCN
REVIEWED BY	---
ORIGINAL ISSUE DATE	06/23/22
CLIENT PROJECT NO.	-

TITLE
SITE PLAN - PLAZA

SHEET
C3-11

PRELIMINARY NOT FOR CONSTRUCTION

PRELIMINARY NOT FOR CONSTRUCTION

PLOT DATE: 1/11/2024 12:49 PM

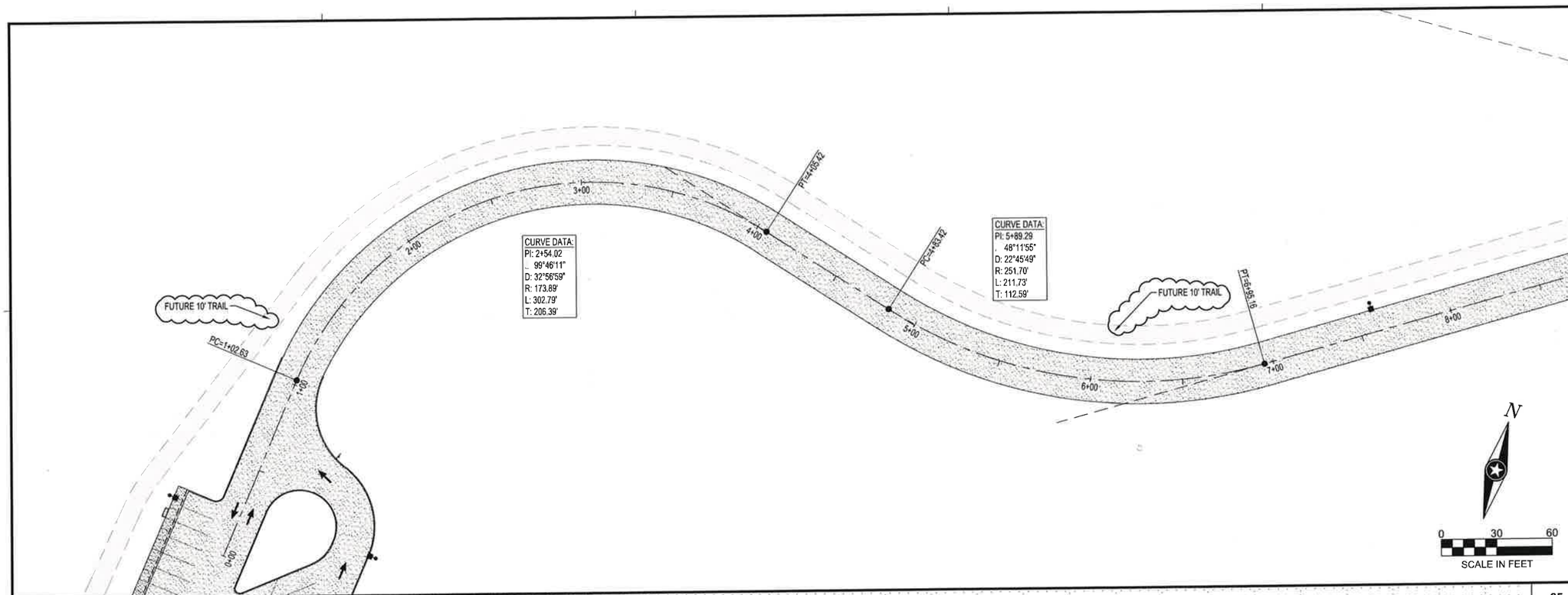

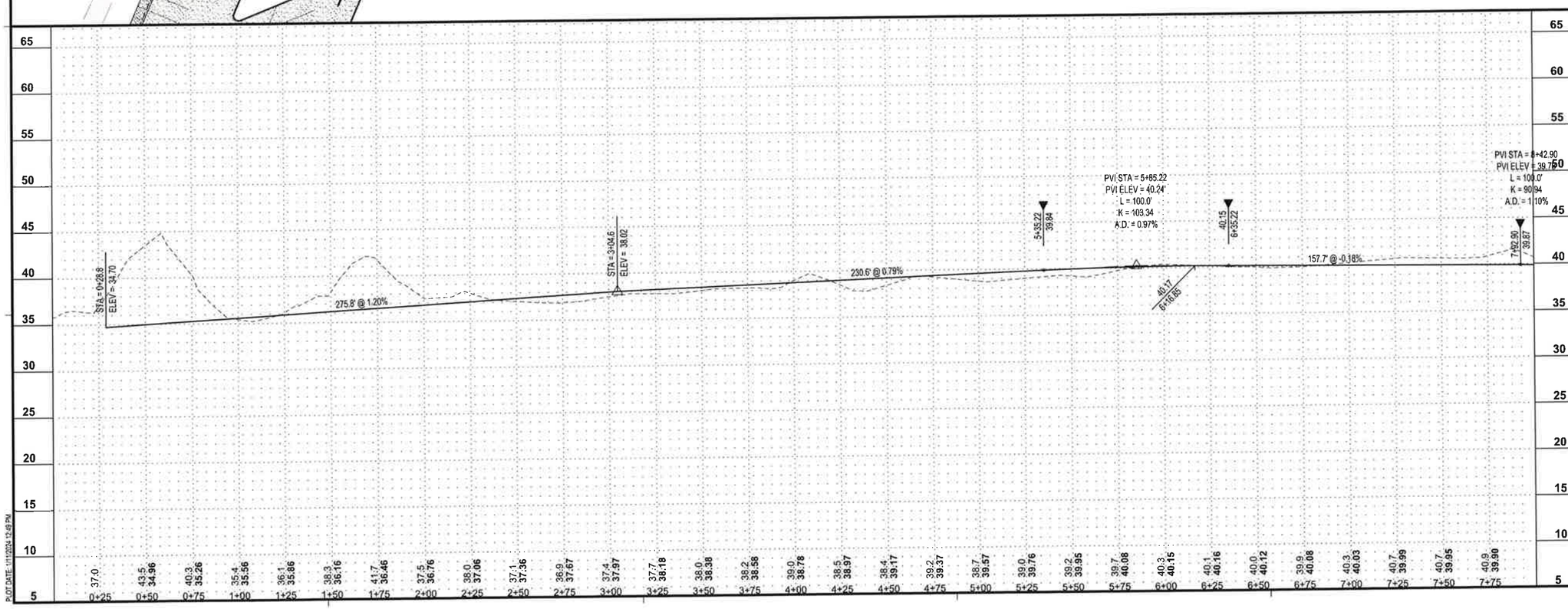

ISG

THE CITY OF WEST DES MOINES

NOTE:
THE CLARITY OF THESE PLANS DEPEND UPON COLOR COPIES. IF THIS TEXT DOES NOT APPEAR IN COLOR, THIS IS NOT AN ORIGINAL PLAN SET AND MAY RESULT IN MISINTERPRETATION.

THIS DOCUMENT IS THE PROPERTY OF I & S GROUP, INC. AND MAY NOT BE USED, COPIED OR DUPLICATED WITHOUT PRIOR WRITTEN CONSENT.

PROJECT

CITY OF WEST DES MOINES RACCOON RIVER GREENWAY BOAT ACCESS

WEST DES MOINES IOWA

REVISION SCHEDULE

DATE	DESCRIPTION	BY
01/11/2024	RESUBMITTAL #1	EBG

PROJECT NO.	21-26274
FILE NAME	26274 C3-SITE
DRAWN BY	PCN
DESIGNED BY	PCN
REVIEWED BY	---
ORIGINAL ISSUE DATE	06/23/22
CLIENT PROJECT NO.	-

TITLE

ACCESS ROAD PLAN AND PROFILE

SHEET

C3-20

PRELIMINARY NOT FOR CONSTRUCTION

PRELIMINARY NOT FOR CONSTRUCTION

PLOT DATE: 1/11/2024 12:49 PM

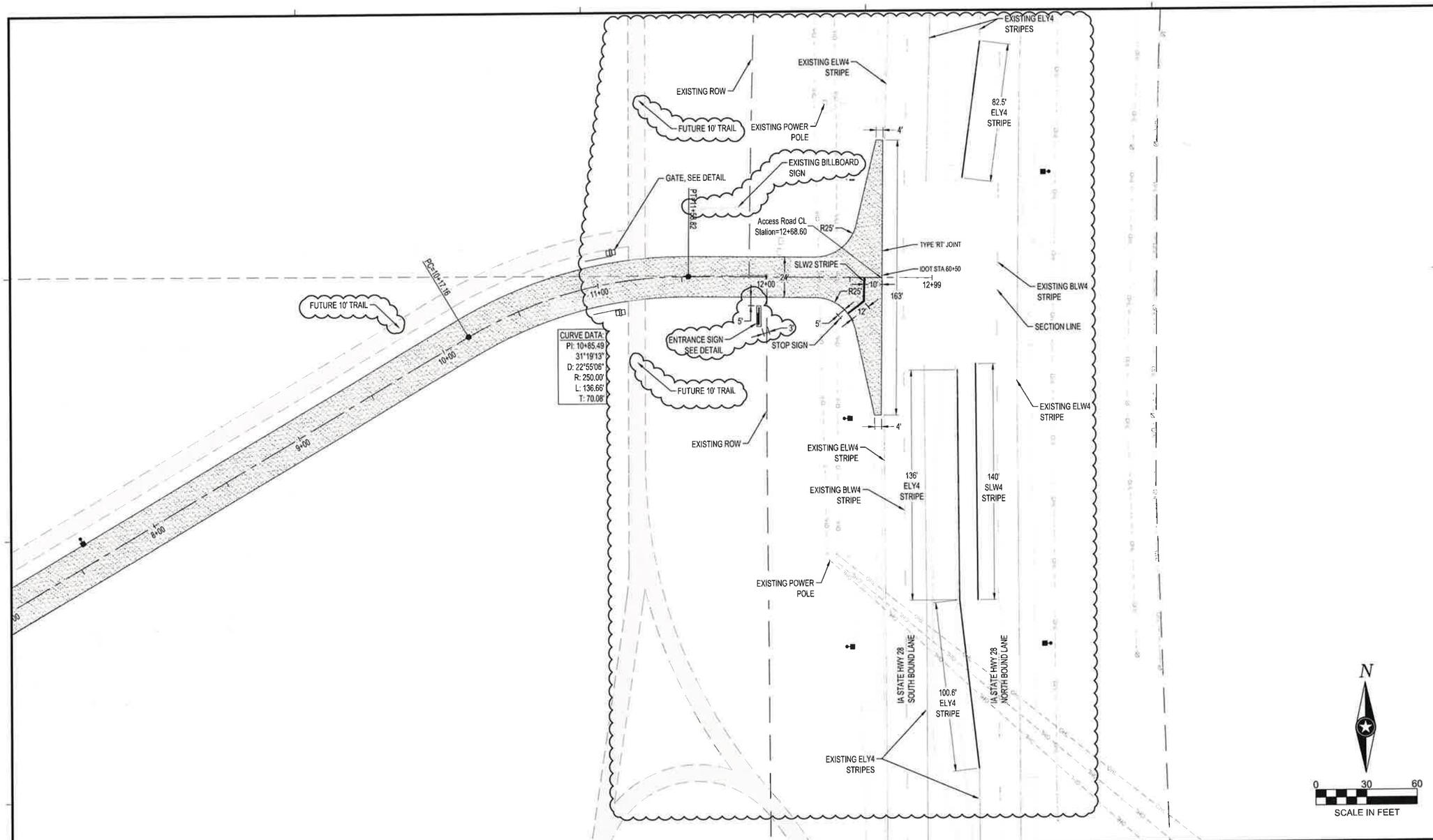

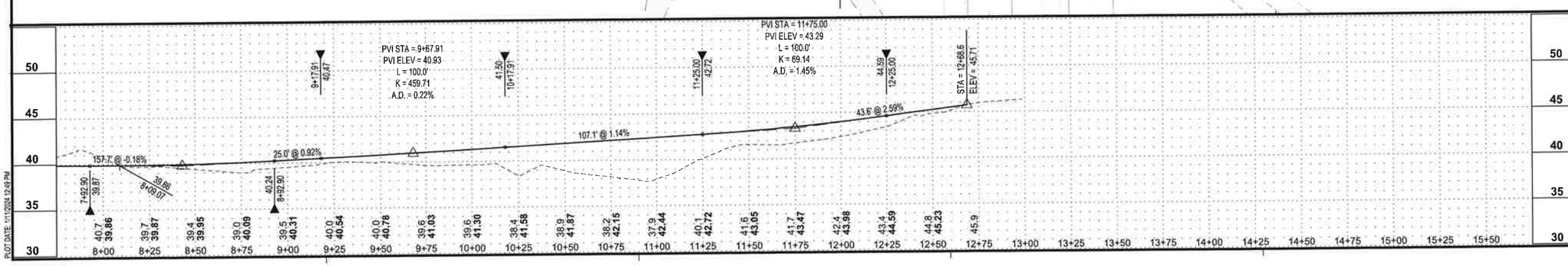

PLOT DATE: 1/11/2024 12:49 PM

ISG

THE CITY OF WEST DES MOINES

NOTE:
THE CLARITY OF THESE PLANS DEPEND UPON COLOR COPIES. IF THIS TEXT DOES NOT APPEAR IN COLOR, THIS IS NOT AN ORIGINAL PLAN SET AND MAY RESULT IN MISINTERPRETATION.

THIS DOCUMENT IS THE PROPERTY OF I & S GROUP, INC. AND MAY NOT BE USED, COPIED OR DUPLICATED WITHOUT PRIOR WRITTEN CONSENT.

PROJECT

CITY OF WEST DES MOINES RACCOON RIVER GREENWAY BOAT ACCESS

WEST DES MOINES IOWA

REVISION SCHEDULE

DATE	DESCRIPTION	BY
01/11/2024	RESUBMITTAL #1	EBG

PROJECT NO.	21-26274
FILE NAME	26274 C3-SITE
DRAWN BY	PCN
DESIGNED BY	PCN
REVIEWED BY	—
ORIGINAL ISSUE DATE	06/23/22
CLIENT PROJECT NO.	*

TITLE

ACCESS ROAD PLAN AND PROFILE

SHEET

C3-21

PRELIMINARY NOT FOR CONSTRUCTION

PRELIMINARY NOT FOR CONSTRUCTION

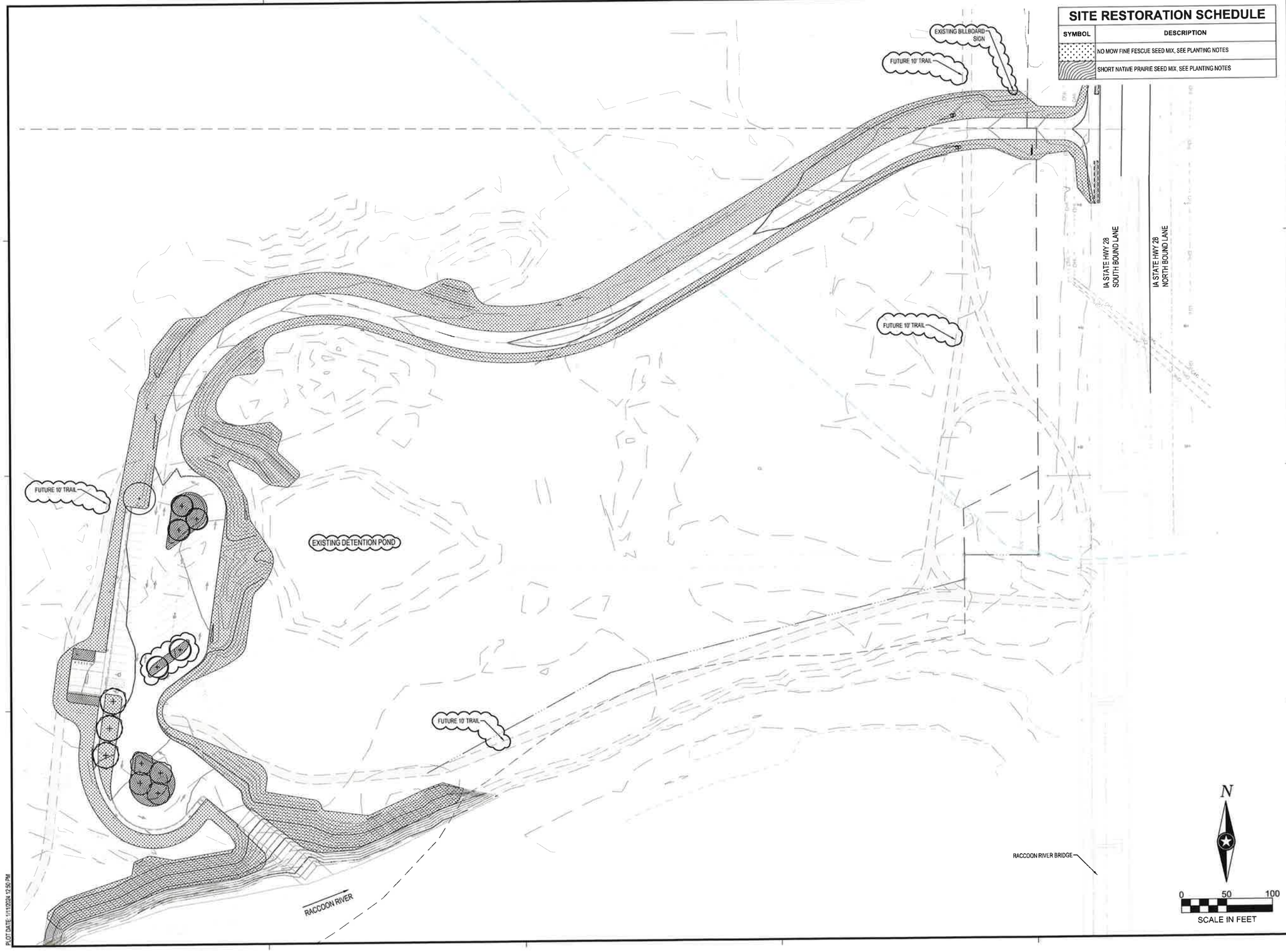

SITE RESTORATION SCHEDULE

SYMBOL	DESCRIPTION
	NO MOW FINE FESCUE SEED MIX, SEE PLANTING NOTES
	SHORT NATIVE PRAIRIE SEED MIX, SEE PLANTING NOTES

ISG

THE CITY OF WEST DES MOINES

NOTE:
THE CLARITY OF THESE PLANS DEPEND UPON COLOR COPIES. IF THIS TEXT DOES NOT APPEAR IN COLOR, THIS IS NOT AN ORIGINAL PLAN SET AND MAY RESULT IN MISINTERPRETATION.

THIS DOCUMENT IS THE PROPERTY OF I & S GROUP, INC. AND MAY NOT BE USED, COPIED OR DUPLICATED WITHOUT PRIOR WRITTEN CONSENT.

PROJECT

CITY OF WEST DES MOINES RACCOON RIVER GREENWAY BOAT ACCESS

WEST DES MOINES IOWA

REVISION SCHEDULE

DATE	DESCRIPTION	BY
01/11/2024	RESUBMITTAL #1	EBG

PROJECT NO.	21-26274
FILE NAME	26274 C5-LAND
DRAWN BY	PCN
DESIGNED BY	PCN
REVIEWED BY	—
ORIGINAL ISSUE DATE	06/23/22
CLIENT PROJECT NO.	-

TITLE

SITE RESTORATION PLAN

SHEET

C5-10

PRELIMINARY NOT FOR CONSTRUCTION

PRELIMINARY NOT FOR CONSTRUCTION

PLOT DATE: 1/11/2024 12:50 PM